2533

PIONEER
The future of sound and vision.

Original

Service Manual

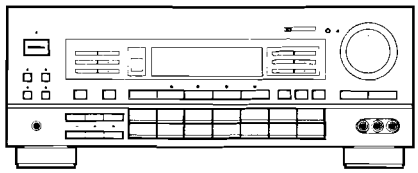

ORDER NO.
ARP1818

AUDIO VIDEO DIGITAL SURROUND AMPLIFIER

VSA-1000

VSA-1000 HAS FOLLOWING VERSIONS :

TYPE	Power requirement	Export destination
KU	AC120V only	U. S. A
SD/G	AC110V, 120V-127V, 220V, 240V (switchable)	U. S. Military

- **This manual is applicable to the KU and SD/G types.**
- **For the SD/G type, refer to page 78.**

CONTENTS

1. SAFETY INFORMATION 2
2. EXPLODED VIEW, PACKING AND PARTS LIST 3
3. IMAGE DIAGRAM 6
4. SCHEMATIC DIAGRAMS AND P.C. BOARD PATTERNS 12
5. ELECTRICAL PARTS LIST 64
6. ADJUSTMENTS 70
7. IC INFORMATION 71
8. PROGRAMABLE REMOTECONTROL UNIT (AXD1085) 73
9. FOR SD/G TYPE 78
10. SURROUND EFFECT 79
11. FRONT PANEL FACILITIES 81
12. REAR PANEL FACILITIES 85
13. SPECIFICATIONS 87

PIONEER ELECTRONIC CORPORATION 4-1, Meguro 1-Chome, Meguro-ku, Tokyo 153, Japan
PIONEER ELECTRONICS SERVICE INC. P.O. Box 1760, Long Beach, California 90801 U.S.A.
PIONEER ELECTRONICS OF CANADA, INC. 505 Cochrane Drive, Markham, Ontario L3R 8E3 Canada
PIONEER ELECTRONIC [EUROPE] N.V. Keetberglaan 1, 2740 Beveren, Belgium
PIONEER ELECTRONICS AUSTRALIA PTY. LTD. 178-184 Boundary Road, Braeside, Victoria 3195, Australia TEL: [03] 580-9911

© PIONEER ELECTRONIC CORPORATION 1989

2533
SO MAY. 1989 Printed in Japan

1. SAFETY INFORMATION

1. SAFETY PRECAUTIONS

The following check should be performed for the continued protection of the customer and service technician.

LEAKAGE CURRENT CHECK

Measure leakage current to a known earth ground (water pipe, conduit, etc.) by connecting a leakage current tester such as Simpson Model 229-2 or equivalent between the earth ground and all exposed metal parts of the appliance (input/output terminals, screwheads, metal overlays, control shaft, etc.). Plug the AC line cord of the appliance directly into a 120V AC 60Hz outlet and turn the AC power switch on. Any current measured must not exceed 0.5mA.

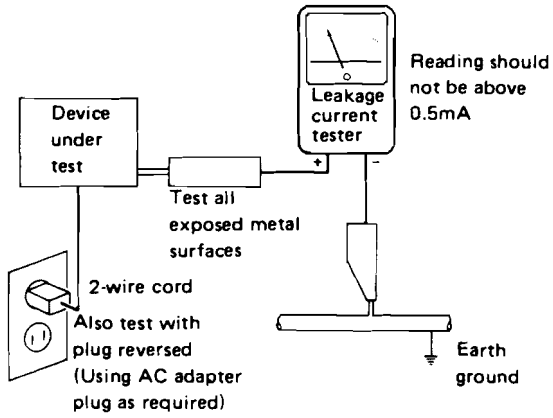

AC Leakage Test

ANY MEASUREMENTS NOT WITHIN THE LIMITS OUTLINED ABOVE ARE INDICATIVE OF A POTENTIAL SHOCK HAZARD AND MUST BE CORRECTED BEFORE RETURNING THE APPLIANCE TO THE CUSTOMER.

2. PRODUCT SAFETY NOTICE

Many electrical and mechanical parts in the appliance have special safety related characteristics. These are often not evident from visual inspection nor the protection afforded by them necessarily can be obtained by using replacement components rated for voltage, wattage, etc. Replacement parts which have these special safety characteristics are identified in this Service Manual.

Electrical components having such features are identified by marking with a ⚠ on the schematics and on the parts list in this Service Manual.

The use of a substitute replacement component which dose not have the same safety characteristics as the PIONEER recommended replacement one, shown in the parts list in this Service Manual, may create shock, fire, or other hazards.

Product Safety is continuously under review and new instructions are issued from time to time. For the latest information, always consult the current PIONEER Service Manual. A subscription to, or additional copies of, PIONEER Service Manual may be obtained at a nominal charge from PIONEER.

2. EXPLODED VIEW, PACKING AND PARTS LIST

EXTERIOR

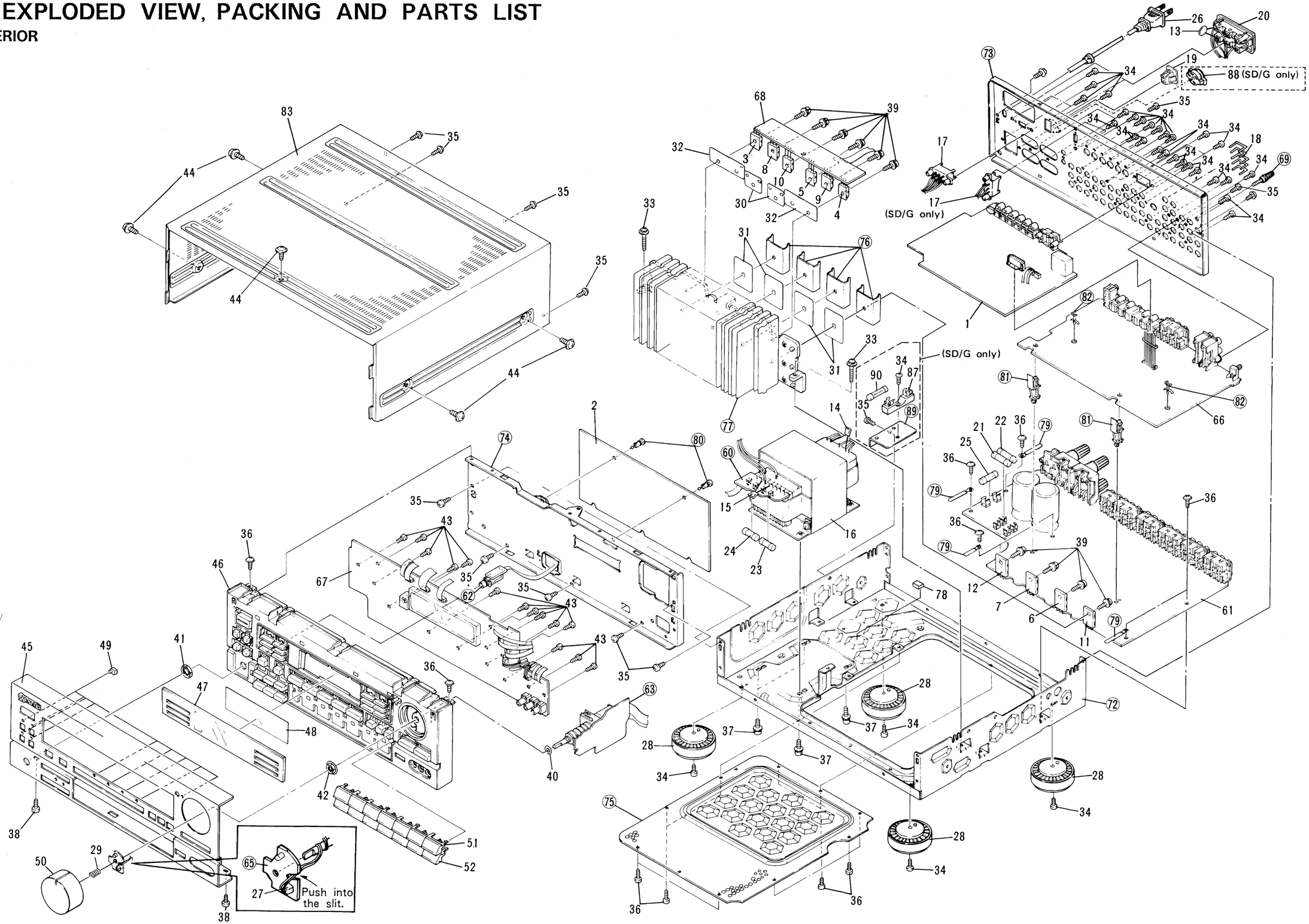

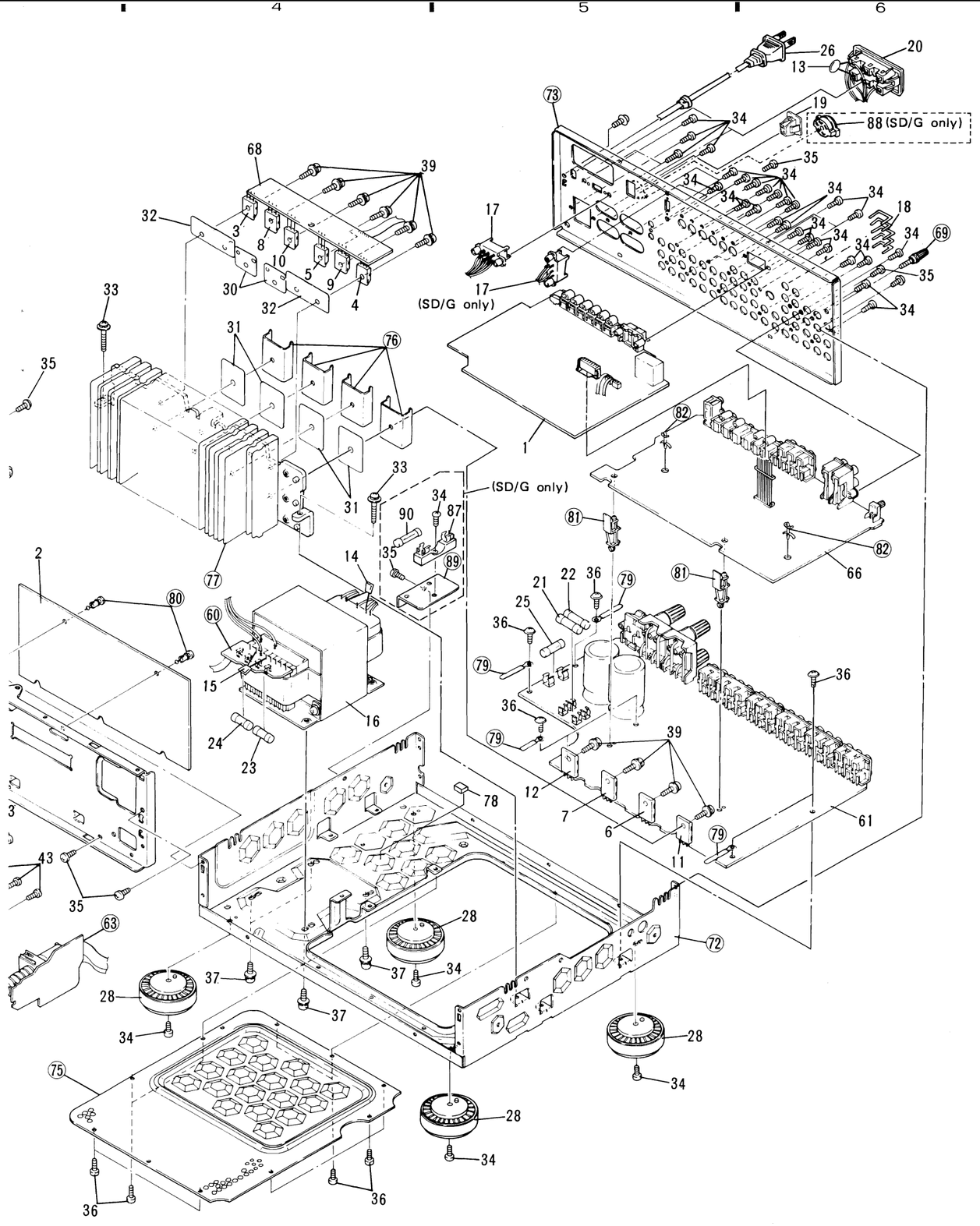

Parts List

NOTES :

- Parts without part number cannot be supplied.
- The ⚠ mark found on some component parts indicates the impotance of the safety factor of the part. Therefore, when replacing, be sure to use parts of identical designation.
- Parts marked by "⊙" are not always kept in stock. Their delivery time may be longer than usual or they may be unavailable.

Mark	No.	Part No.	Description
	1	AWQ1008	S/SUPERIMPOSE ASSEMBLY
	2	AWX1029	PRO-LOGIC ASSEMBLY
⚠	3	2SA1263N	TRANSISTOR Q 7
⚠	4	2SA1263N	TRANSISTOR Q 8
⚠	5	2SA1263N	TRANSISTOR Q 9
⚠	6	2SA1302	TRANSISTOR Q 3
⚠	7	2SA1302	TRANSISTOR Q 4
⚠	8	2SC3180N	TRANSISTOR Q 5
⚠	9	2SC3180N	TRANSISTOR Q 6
⚠	10	2SC3180N	TRANSISTOR Q10
⚠	11	2SC3281	TRANSISTOR Q 1
⚠	12	2SC3281	TRANSISTOR Q 2
⚠	13	ACG1003	CKA (0.01/AC400V) C 5
⚠	14	CQMXA823J100	CAPACITOR C 6
⚠	15	CQMXA823J100	CAPACITOR C 7
⚠	16	ATS1202	POWER TRANSFORMER T 1
		ATS1203	POWER TRANSFORMER T 1 (SD/G TYPE ONLY)
⚠	17	AKX1004	VOLTAGE SELECTOR S 1
	18	AKM1019	JUMPER PLUG
⚠	19	AKP-507	AC SOCKET 1-P
⚠	20	AKP-515	AC SOCKET 3-P
⚠	21	AEK-109	FUSE(6A) FU 3
⚠	22	AEK-109	FUSE(6A) FU 4
⚠	23	AEK-120	FUSE(1.25A) FU 5
⚠	24	AEK-120	FUSE(1.25A) FU 6
⚠	25	AEK-310	FUSE(10A) FU 1
		AEK-109	FUSE (6A) FU1 (SD/G TYPE ONLY)
⚠	26	ADG1031	AC POWER CORD
		ADG1015	AC POWER CORD (SD/G TYPE ONLY)
	27	ADX1191	2P WIRE FORMS WITH HOUSING
	28	AMR1159	FOOT
	29	ABH1018	SPRING
	30	AEC-818	MICA SHEET
	31	AEC1123	MICA SHEET
	32	AEC1140	MICA SHEET
	33	ABA-297	SCREW (STEEL)
	34	ABA-298	SCREW
	35	ABA1009	SCREW (STEEL)
	36	ABA1011	SCREW (STEEL)
	37	ABA1034	SCREW
	38	ABA1048	SCREW (STEEL)
	39	ABA1082	SCREW
	40	ABE1001	WASHER (COPPER)
	41	ABN-065	NUT
	42	ABN-072	FLANGE NUT M9
	43	BBZ30P080FZK	SCREW
	44	FBT40P080FZK	SCREW
	45	ANB1337	FRONT PANEL ASSEMBLY
	46	AMB1499	PANEL BASE
	47	AAK1649	PVC PANEL
	48	AAK1712	COLOR PLATE
	49	AMR1160	INDICATING LENS
	50	AAB1101	VR KNOB ASSEMBLY
	51	AAD1502	FUNCTION KNOB
	52	AAD1503	FUNCTION KNOB
	53	ARB1177	OPERATING INSTRUCTIONS
	54	AXD1085	REMOTE CONTROL UNIT
	55	AAK1671	TEMPLATE TV (REFER TO PAGE 73)
	56	AAK1672	TEMPLATE VDP (REFER TO PAGE 73)
	57	AHA1164	FRONT-REAR PAD
	58	AHD1640	PACKING CASE
	59		.....
	60		TERMINAL ASSEMBLY
	61	AWZ2444	AF ASSEMBLY
	62		HEADPHONE ASSEMBLY
	63		MOTOR-VOL ASSEMBLY
	64		.....
	65		VOL IND ASSEMBLY
	66	AWZ2441	V/SUR.FL ASSEMBLY
	67	AWZ2442	FRONT CONTROL ASSEMBLY
	68	AWZ2443	REAR.CENTER AMP ASSEMBLY
	69		TERMINAL SCREW
	70		.....
	71		.....
	72		CHASSIS
	73		REAR PANEL
	74		PANEL STAY
	75		BOTTOM PLATE
	76		SUB-HEAT SINK
	77		HEAT SINK
	78		CUSHION
	79		NYLON BINDER
	80		RIVET
	81		PCB HOLDER
	82		PCB SUPORT
	83	AZN1804	BONNET CASE
	84		.....
	85		AM4 BATTERY(1.5V)
	86		SHEET
	87	AKR-032	FUSE HOLDER (SD/G TYPE ONLY)
	88	AKX-507	VOLTAGE SELECTOR (SD/G TYPE ONLY)
	89		FUSE HOLDER STAY (SD/G TYPE ONLY)
⚠	90	AEK-109	FUSE FU2 (SD/G ONLY)
	91	ADE1056	CONNECTION CORD
	92	ADE1057	CONNECTION CORD
	93	ADE1059	CONNECTION CORD

PACKING

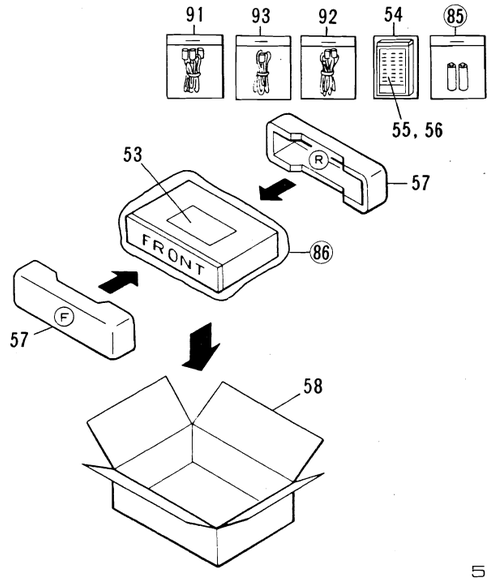

3. IMAGE DIAGRAM

3.1 AUDIO SECTION

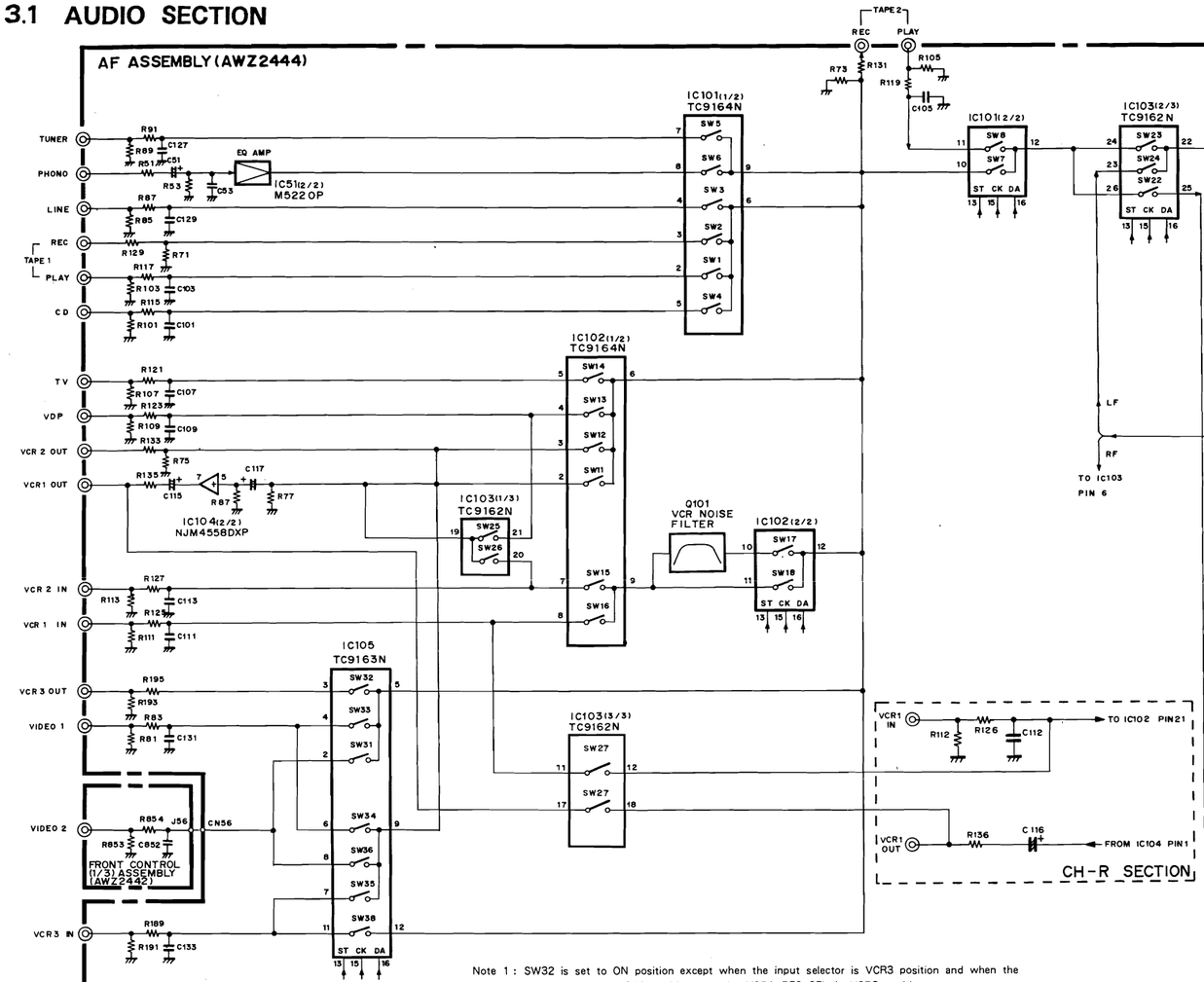

Note 1 : SW32 is set to ON position except when the input selector is VCR3 position and when the input selector is VCR1 position and the VCR1 REC SEL is VCR3 position.
Note 2 : SW11 is set to ON position except when the input selector is VCR1 position.
Note 3 : SW12 is set to ON position except when the input selector is VCR2 position and when the input selector is VCR1 and the VCR1 REC SEL is VCR2 position.
Note 4 : SW17 is always set to OFF position, and SW18 is always set to ON position.
Note 5 : VCR : Video Cassette Recorder = VTR

On set switches

SWITCH IC NO. / INPUT SEL.		IC102 (TC9164N)	IC105 (TC9163N)
VCR 1		SW16	SW32 * 1.
VCR 2		SW15	
VCR 3			SW38
VDP		SW13	
TV		SW14	
VIDEO 1			SW33
VIDEO 2			SW31
VCR NOISE FILTER	ON	SW17	
	OFF	SW18	

SWITCH IC NO. / INPUT SEL.		IC101 (TC9164N)
TAPE1 / DAT 1		SW1
TAPE2/DAT2 MONITOR	ON	SW8
	OFF	SW7
LINE		SW3
CD		SW4
TUNER		SW5
PHONO		SW6

SWITCH IC NO. / OTHERS SELECTOR		IC103 (TC9162N)	IC105 (TC9163N)
VCR 1 REC SEL.	VCR 2	SW26	
	VCR 3		SW35
	VDP	SW25	
	VIDEO 1		SW34
	VIDEO 2		SW36
SURROUND MODE	DOLBY	SW22,SW24	
	others	SW23	
VCR 1 MODE	MONO	SW27	
	STEREO		

IC1130 PIN NO.		1	3	4
TEST TONE "ON"	L	L	L	L
	C	L	L	H
	R	L	H	L
	S	L	H	H
TEST TONE "OFF"		H	-	-

CENTER & SURROU	
IC1130 PIN NO.	
FUNCTION	
CENTER MODE	OFF
	NORM
	WID
	PHAN
SURROUND MODE	DOLE
	OTHE

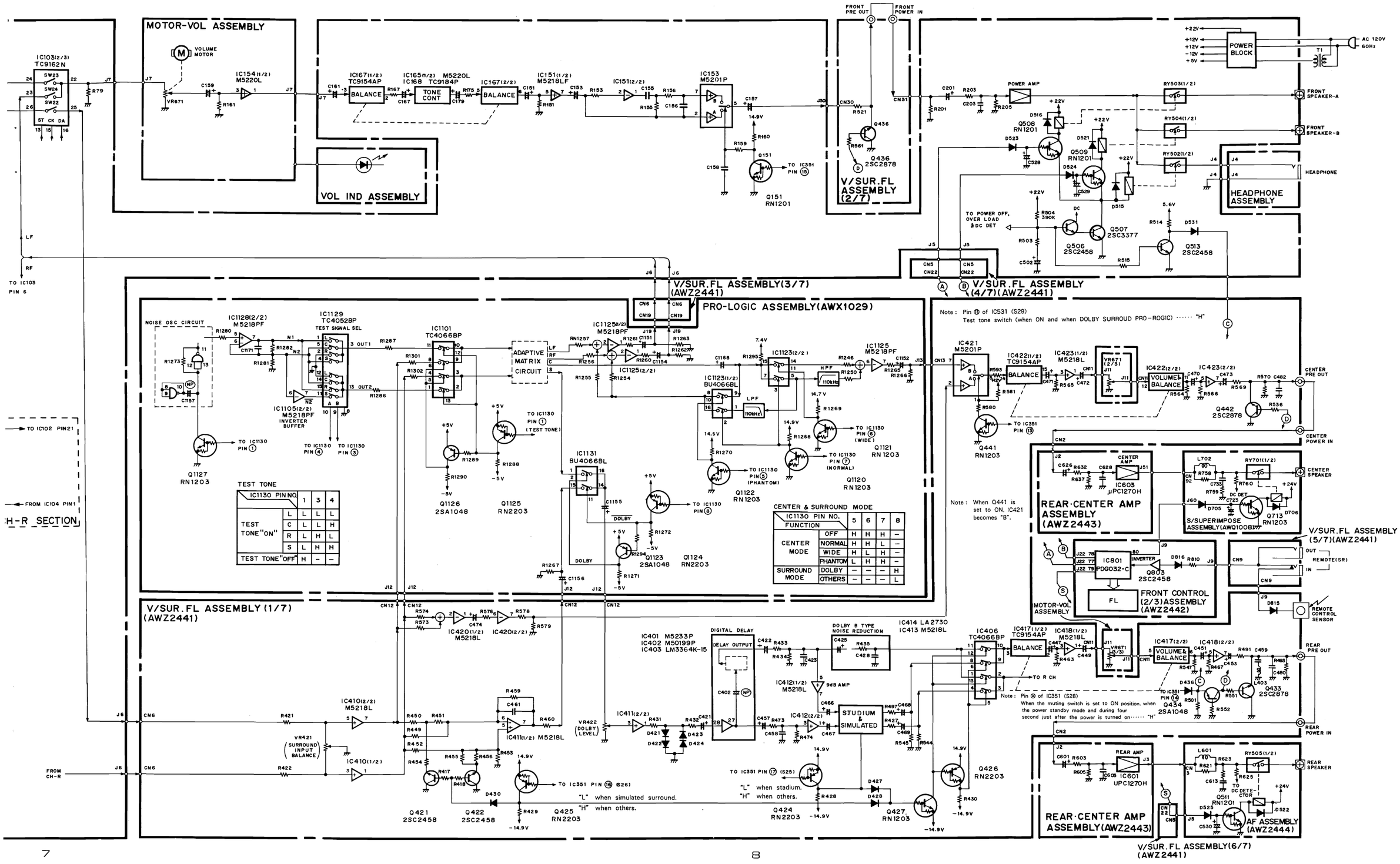

IC1130 PIN NO.		1	3	4
TEST TONE "ON"	L	L	L	L
	C	L	L	H
	R	L	H	L
	S	L	H	H
TEST TONE "OFF"		H	–	–

IC1130 PIN NO.		5	6	7	8
FUNCTION					
CENTER MODE	OFF	H	H	H	–
	NORMAL	H	H	L	–
	WIDE	H	L	H	–
	PHANTOM	L	H	H	–
SURROUND MODE	DOLBY	–	–	–	H
	OTHERS	–	–	–	L

3.2 VIDEO SECTION

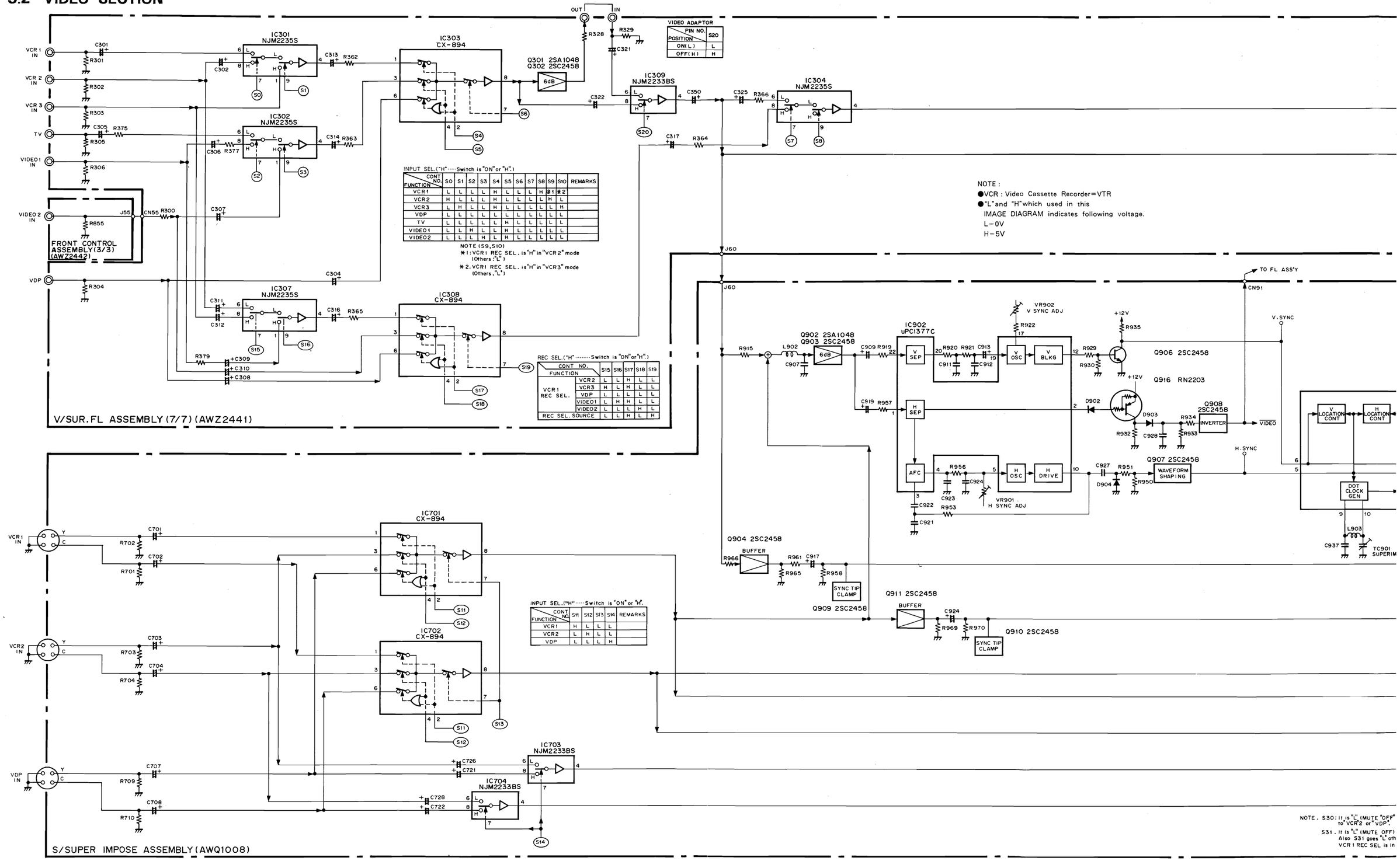

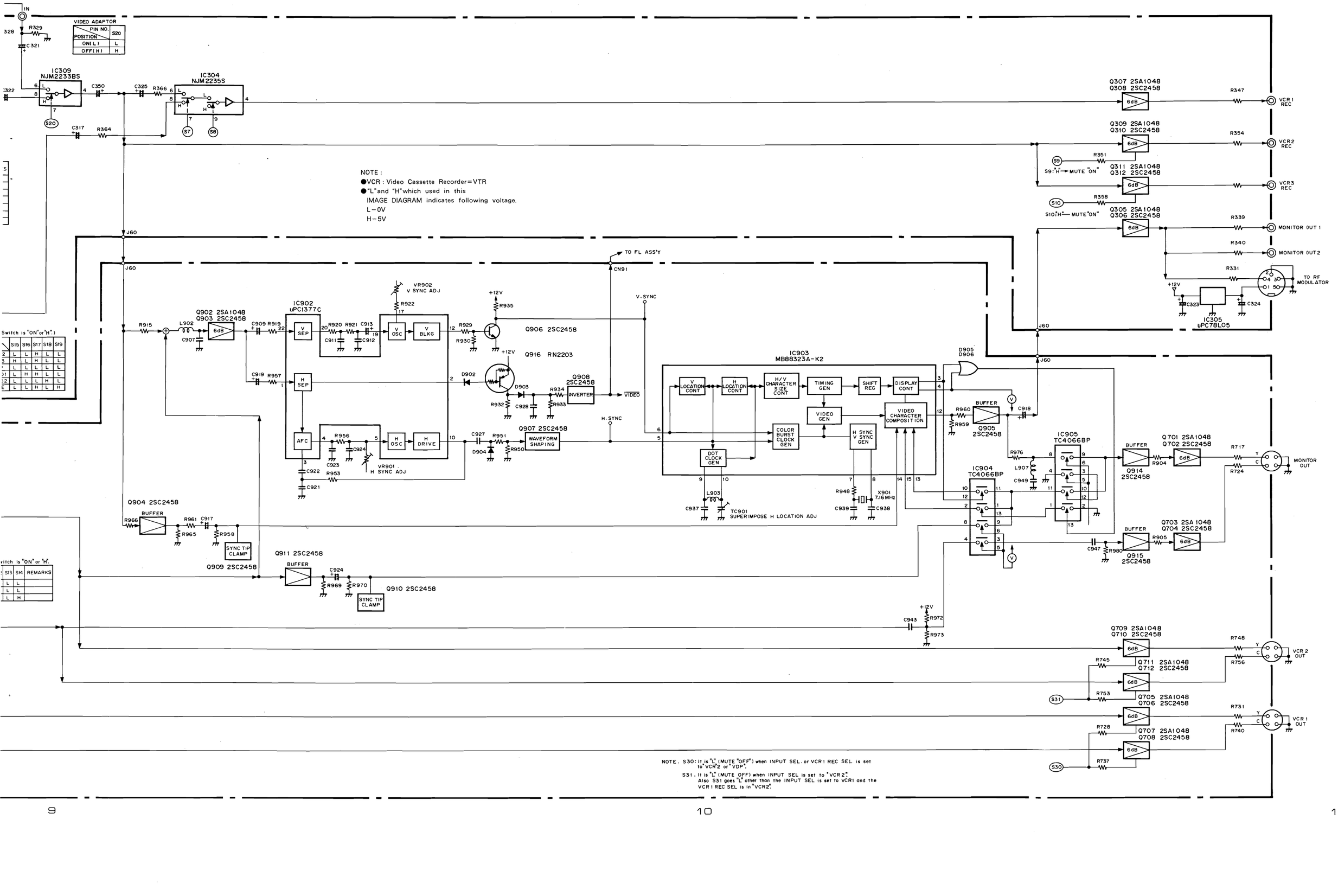

Switch is "ON" or "H".

	S15	S16	S17	S18	S19
2	L	L	H	L	L
3	H	L	H	L	L
'	L	L	L	L	L
)1	L	H	H	L	L
)2	L	L	L	H	L
E	L	L	H	L	H

witch is "ON" or "H".

S13	S14	REMARKS
L	L	
L	L	
L	H	

NOTE. S30: It is "L" (MUTE "OFF") when INPUT SEL. or VCR1 REC SEL is set to "VCR2" or "VDP".
S31. It is "L" (MUTE OFF) when INPUT SEL is set to "VCR2".
Also S31 goes "L" other than the INPUT SEL is set to VCR1 and the VCR1 REC SEL is in "VCR2".

4. SCHEMATIC DIAGRAMS AND P.C. BOARD PATTERNS

4.1 OVER ALL SCHEMATIC DIAGRAM

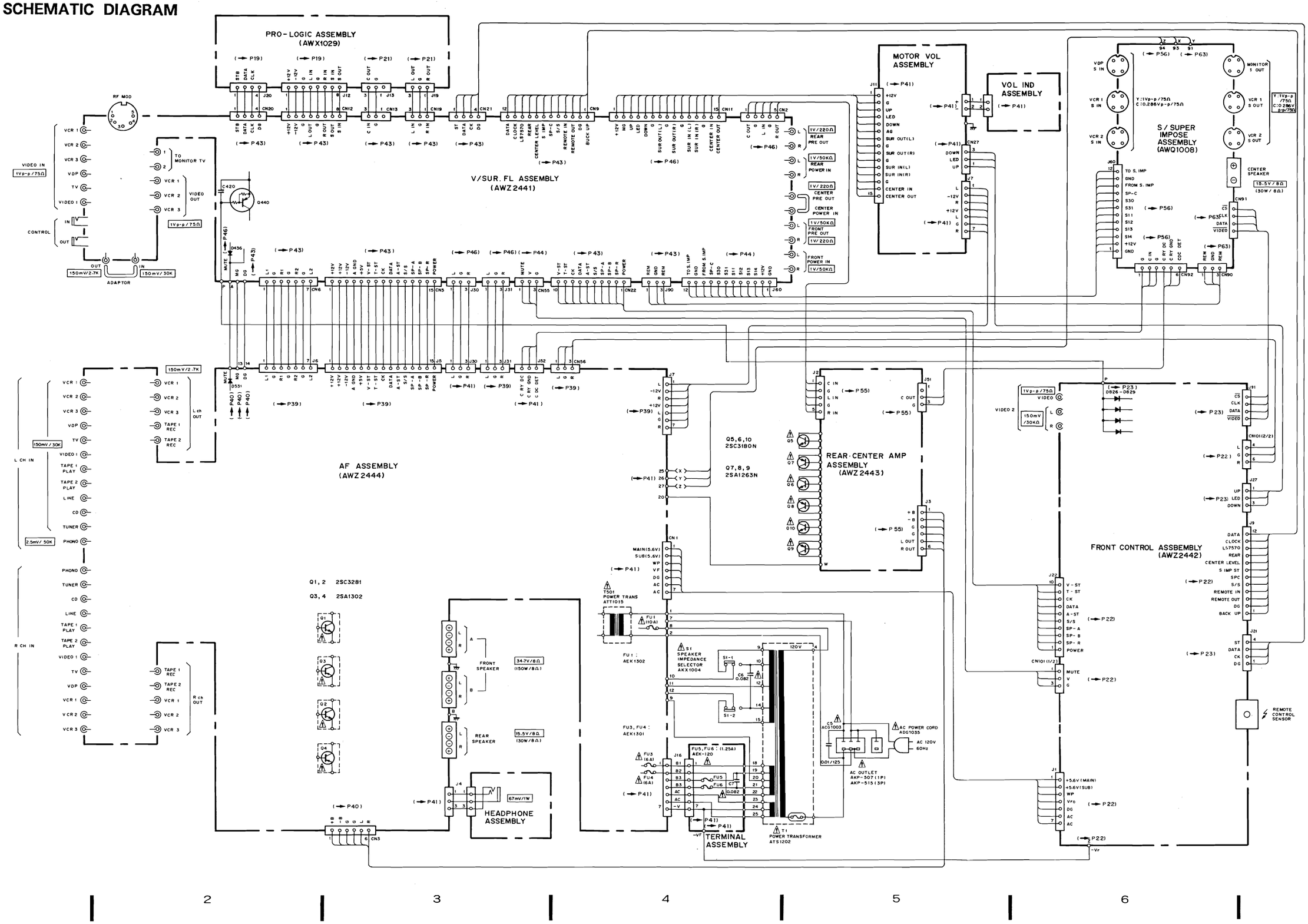

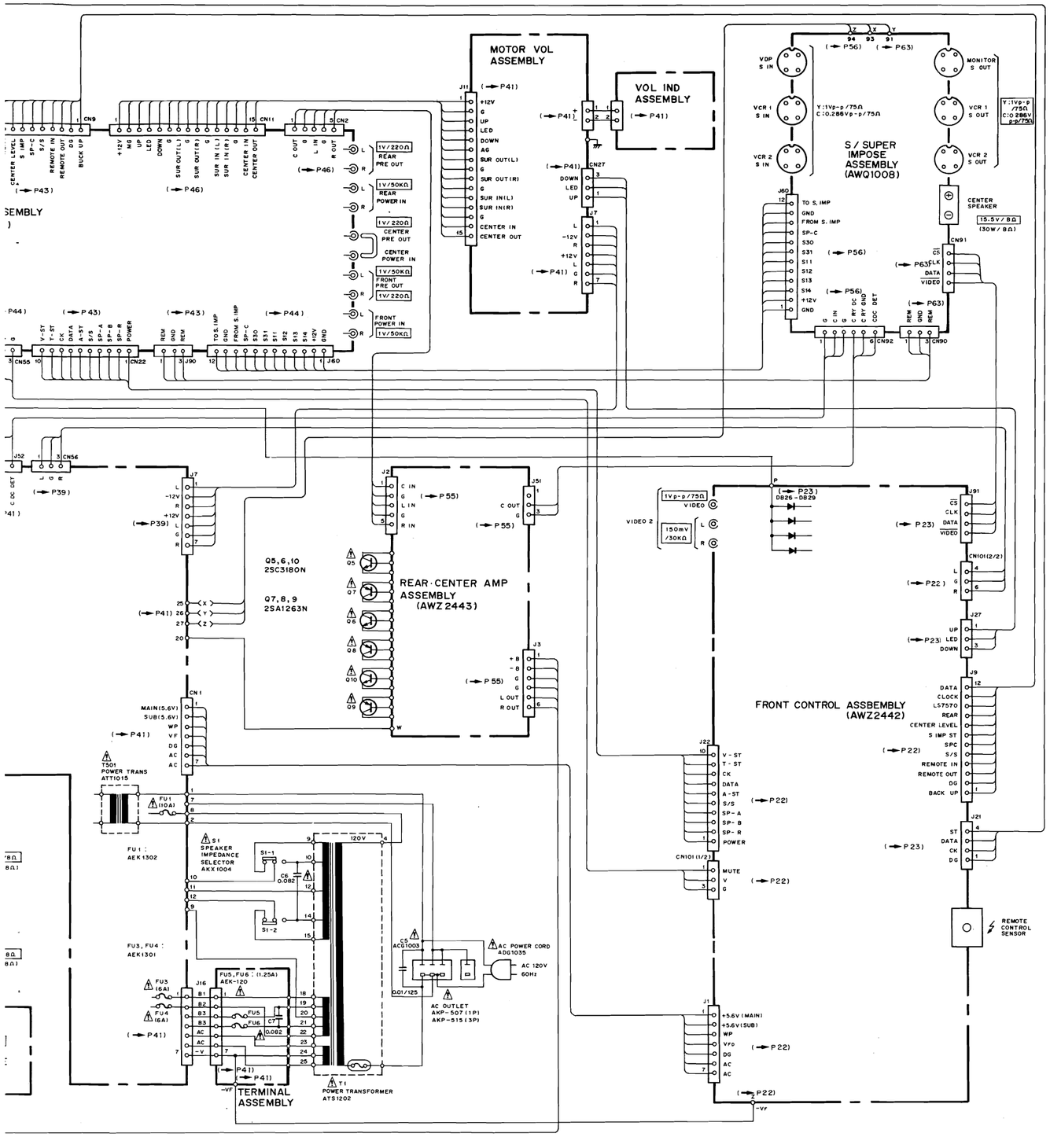

1. RESISTORS :
   Indicated in Ω, 1/4W, 1/6W, ±5% tolerance unless otherwise noted k ; kΩ, M ; MΩ, (F) ; ±1%, (G) ; ±2%, (K) ; ±10%, (M) ; ±20% tolerance.

2. CAPACITORS :
   Indicated in capacity (μ F) /voltage (V) unless otherwise noted p ; pF.
   Indication without voltage is 50V except electrolytic capacitor.

3. VOLTAGE AND CURRENT :
   V : Input / output voltage for the rated power output (100W+100W, 8Ω).
   : DC voltage (V) at no input signal.
   Value in ( ) is DC voltage at rated power output.
   mA : DC current at no input signal.

4. OTHERS
   ➡ : Signal route.
   ⊘ : Adjusting point.
   The ⚠ mark found on some component parts indicates the importance of the safety factor of the part. Therefore, when replacing, be sure to use parts of identical designation.
   ※marked capacitor and resistor have parts numbers.

5. SWITCHES
   The switch position is indicated by lines.
   S1 : SPEAKER IMPEDANCE SELECTOR
   A, B more than 8Ω ↔ less than 8Ω
   S2 : VOLTAGE SELECTOR (SD/G only)
   220V, 240V ↔ 110V, 120V−127V
   S3 : VOLTAGE SELECTOR (SD/G only)
   110V, 120V−127V, 220V, 240V

Note
※Normal display will be achieved when the CD DIRECT is set to OFF.
L and R will invert when it is ON.

S815 : VCR 1 MONO
S816 : VCR NOISE FILTER
S817 : SIMULATED STEREO

For SD/G type only

4.2 PRO-LOGIC ASSEMBLY

• View from soldering side

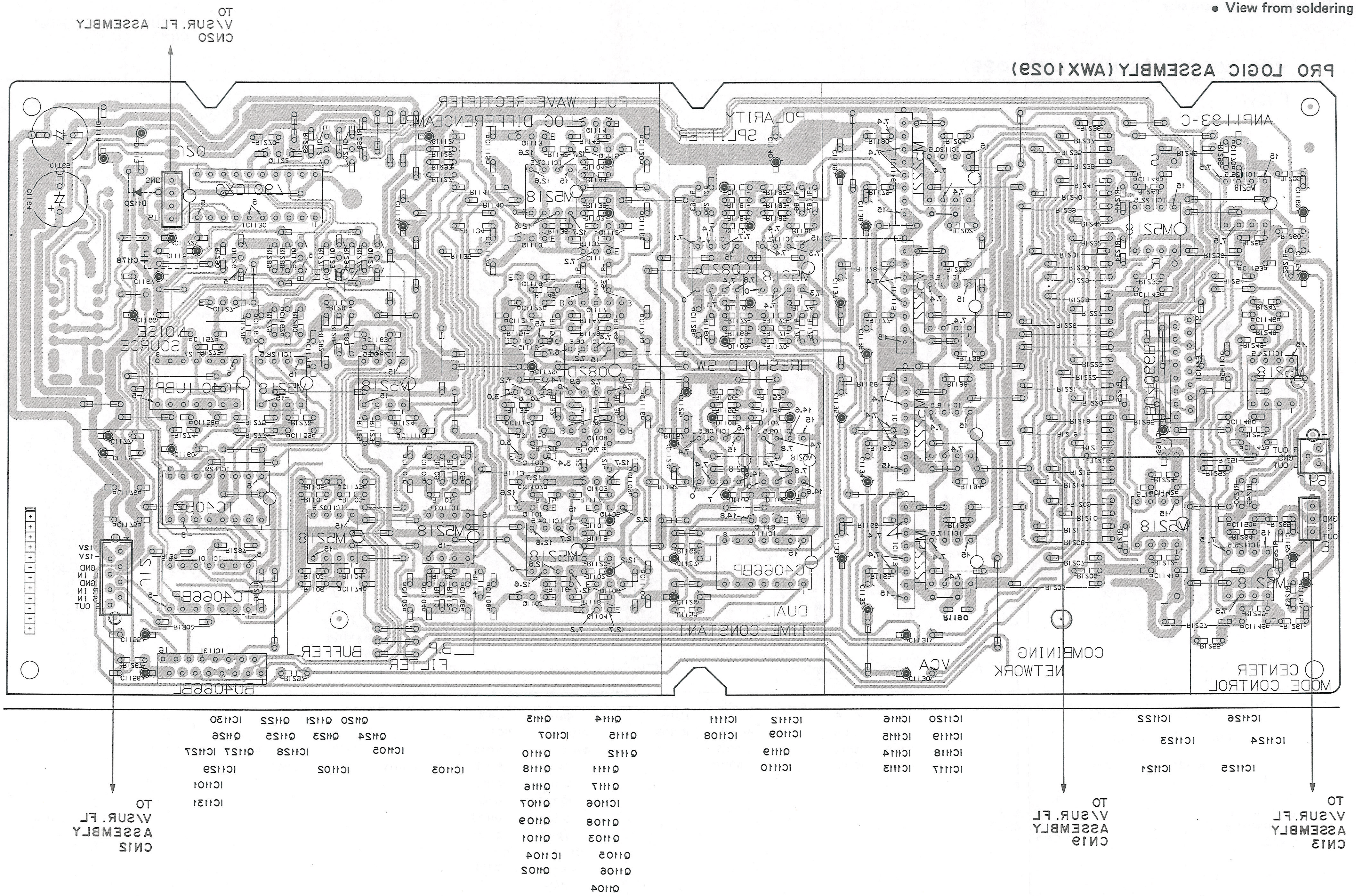

4.2 PRO–LOGIC ASSEMBLY

- View from component side

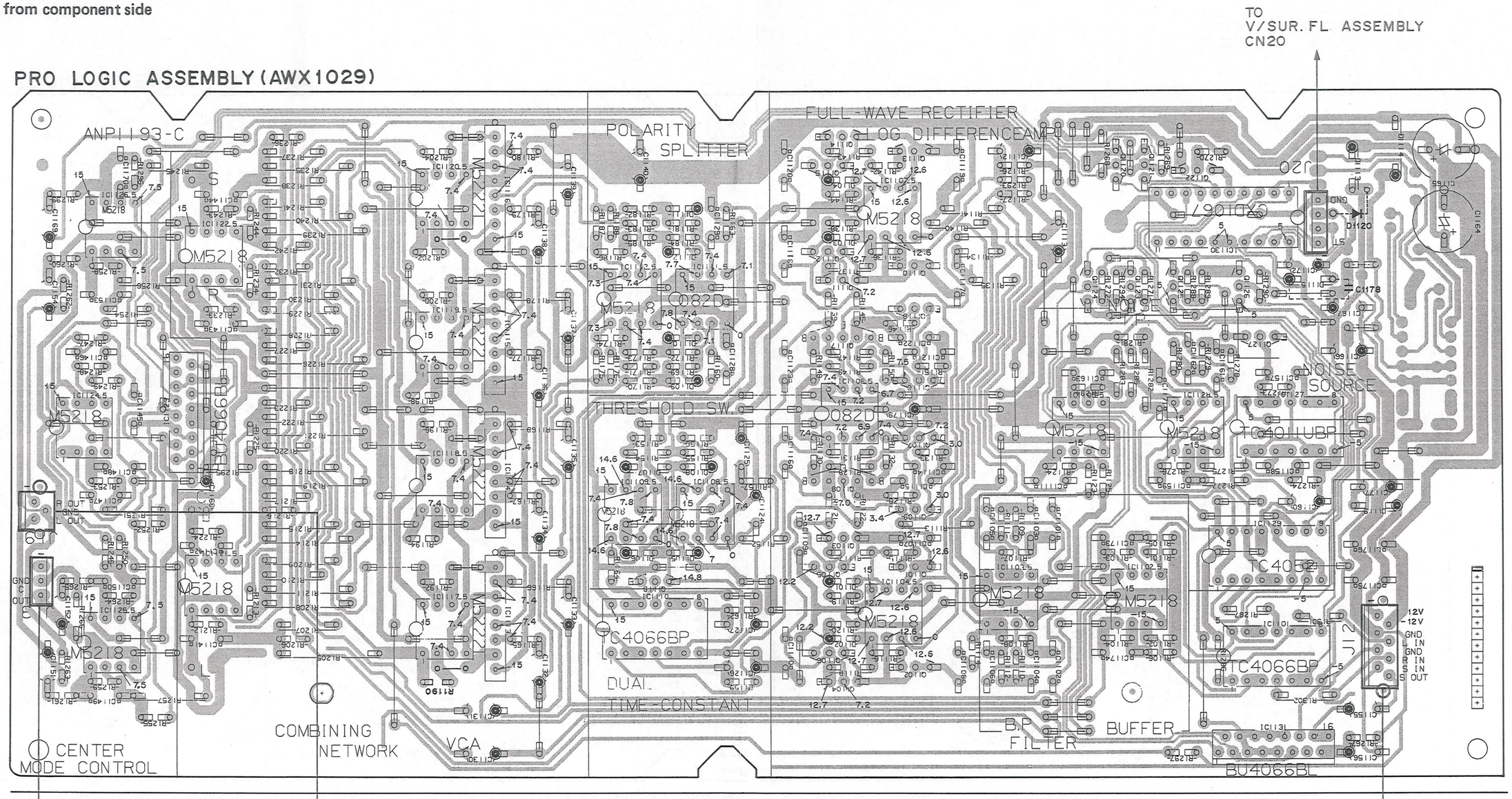

4.2 PRO–LOGIC ASSEMBLY

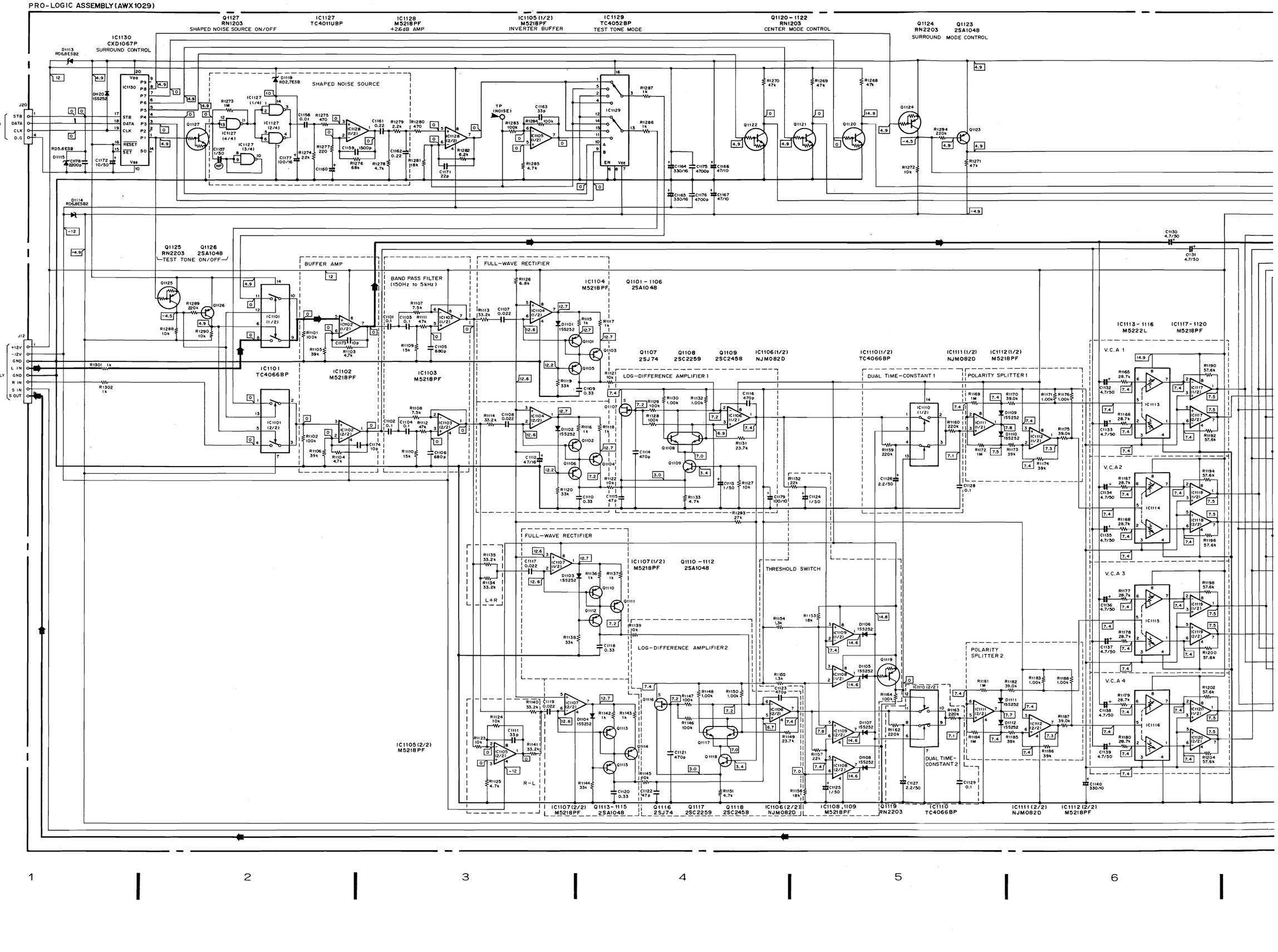

IC1105 (1/2)
M5218PF
INVERTER BUFFER

IC1129
TC4052BP
TEST TONE MODE

Q1120 – 1122
RN1203
CENTER MODE CONTROL

Q1124
RN2203

Q1123
2SA1048
SURROUND MODE CONTROL

FULL-WAVE RECTIFIER

IC1104
M5218PF

Q1101 – 1106
2SA1048

IC1113 – 1116
M5222L

IC1117 – 1120
M5218PF

IC1121, 1122
M5218PF

COMBINING NETWORK

IC1125 (1/2)
M5218PF
INVERTER BUFFER

TO V/SUR. FL ASSEMBLY CN19

(→P43)

Q1107
2SJ74

Q1108
2SC2259

Q1109
2SC2458

IC1106(1/2)
NJM082D

LOG-DIFFERENCE AMPLIFIER 1

IC1110(1/2)
TC4066BP

DUAL TIME-CONSTANT 1

IC1111(1/2)
NJM082D

IC1112(1/2)
M5218PF

POLARITY SPLITTER 1

V.C.A 1

V.C.A 2

V.C.A 3

V.C.A 4

IC1123
BU4066BL

IC1124, 1125(2/2)
M5218PF

CENTER MODE CONTROL

TO V/SUR. FL ASSEMBLY CN13

(→P43)

FULL-WAVE RECTIFIER

IC1107(1/2)
M5218PF

Q1110 – 1112
2SA1048

THRESHOLD SWITCH

L+R

LOG-DIFFERENCE AMPLIFIER2

POLARITY SPLITTER 2

DUAL TIME-CONSTANT 2

R-L

IC1126 (2/2)
M5218PF
INVERTER BUFFER

IC1131
BU4066BL
SURROUND MODE SWITCH

IC1126 (1/2)
M5218PF
INVERTER BUFFER

150mV/470Ω

IC1107(2/2)
M5218PF

Q1113 – 1115
2SA1048

Q1116
2SJ74

Q1117
2SC2259

Q1118
2SC2458

IC1106(2/2)
NJM082D

IC1108, 109
M5218PF

Q1119
RN2203

IC1110
TC4066BP

IC1111(2/2)
NJM082D

IC1112(2/2)
M5218PF

MAIN ROUTE

4.3 FRONT CONTROL ASSEMBLY

SWITCHES
FRONT CONTROL ASS'Y
S801 : POWER
S802 : FRONT SPEAKERS A
S803 : FRONT SPEAKERS B
S804 : CENTER SPEAKER
S805 : REAR SPEAKERS
S806 : SLEEP
S807 : CENTER MONO OUT
S808 : ACOUSTIC MEMORY
S809 : ACOUSTIC SELECT
S810 : TREBLE−
S811 : TREBLE+
S812 : BASS−
S813 : BASS+
S815 : VCR 1 MONO
S816 : VCR NOISE FILTER
S817 : SIMULATED STEREO
S819 : REC SEL SOURCE
S820 : VCR1 REC SEL
S821 : VIDEO SELECT
S826 : BALANCE LEFT
S827 : BALANCE RIGHT
S828 : MUTING
S829 : SOUND FIELD MEMORY−MEMORY
S830 : SOUND FIELD MEMORY−SELECT
S831 : CENTER LEVEL−
S832 : CENTER LEVEL+
S833 : REAR LEVEL−
S834 : REAR LEVEL+
S835 : DELAY TIME
S836 : SURROUND OFF
S837 : STUDIO
S838 : STADIUM
S839 : SIMULATED SURROUND
S840 : DOLBY SURROUND PRO LOGIC
S841 : CENTER MODE
S842 : TEST TONE
S843 : VCR1
S844 : VCR2
S845 : VCR3
S846 : VDP
S847 : TV
S848 : VIDEO1
S849 : VIDEO2
S850 : TAPE/DAT1
S851 : TAPE2/DAT2 MONITOR
S852 : LINE
S853 : CD
S854 : TUNER
S855 : PHONO
S856 : VIDEO ADAPTOR
S857 : CD DIRECT

PIN CONNECTION

PIN No.	1	2	3	4	5	6	7	8	9	10	11	12	13	14	15	16	17	18	19	20	21	22	23	24	25
CONNECTION	FF11	FF11	NNPP	NNPP	V	GO	GG01	GG23	GG45	GG67	GG89	GG1011	GGNP	U	SS1515	SS1413	SS1211	SS1110

PIN No.	26	27	28	29	30	31	32	33	34	35	36	37	38	39	40	41	42	43	44	45	46	47	48	49
CONNECTION	S9	S8	NP	S0	S1	S5	S7	S6	S4	S2	S3	NP	NP	NP	NP	NP	NP	NP	NP	NP	NP	NP	F2	F2

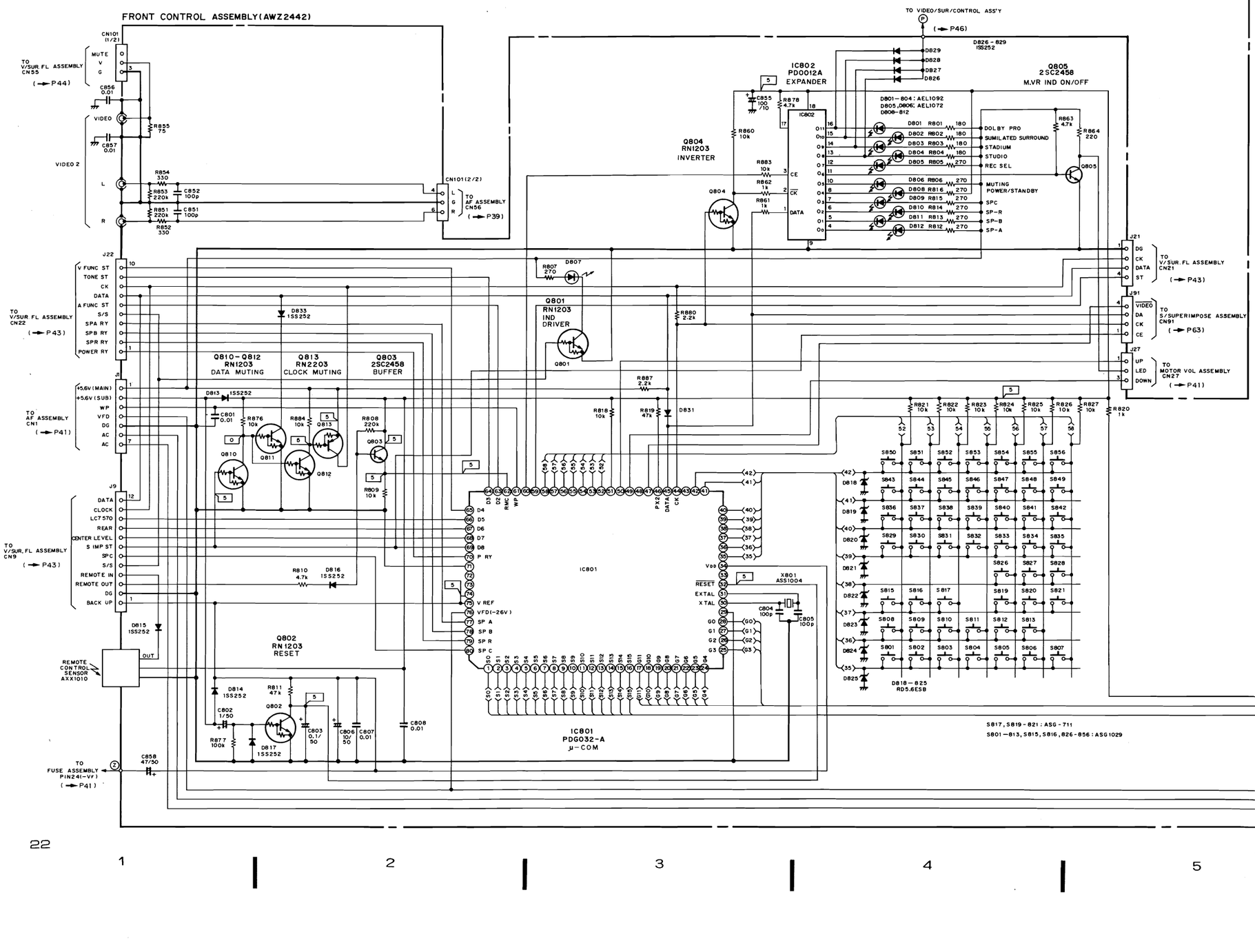

S819 : REC SEL SOURCE
S820 : VCR1 REC SEL
S821 : VIDEO SELECT
S826 : BALANCE LEFT
S827 : BALANCE RIGHT
S828 : MUTING
S829 : SOUND FIELD MEMORY-MEMORY
S830 : SOUND FIELD MEMORY-SELECT
S831 : CENTER LEVEL-
S832 : CENTER LEVEL+
S833 : REAR LEVEL-
S834 : REAR LEVEL+
S835 : DELAY TIME
S836 : SURROUND OFF
S837 : STUDIO
S838 : STADIUM
S839 : SIMULATED SURROUND
S840 : DOLBY SURROUND PRO LOGIC
S841 : CENTER MODE
S842 : TEST TONE
S843 : VCR1
S844 : VCR2
S845 : VCR3
S846 : VDP
S847 : TV
S848 : VIDEO1
S849 : VIDEO2
S850 : TAPE/DAT1
S851 : TAPE2/DAT2 MONITOR
S852 : LINE
S853 : CD
S854 : TUNER
S855 : PHONO
S856 : VIDEO ADAPTOR
S857 : CD DIRECT

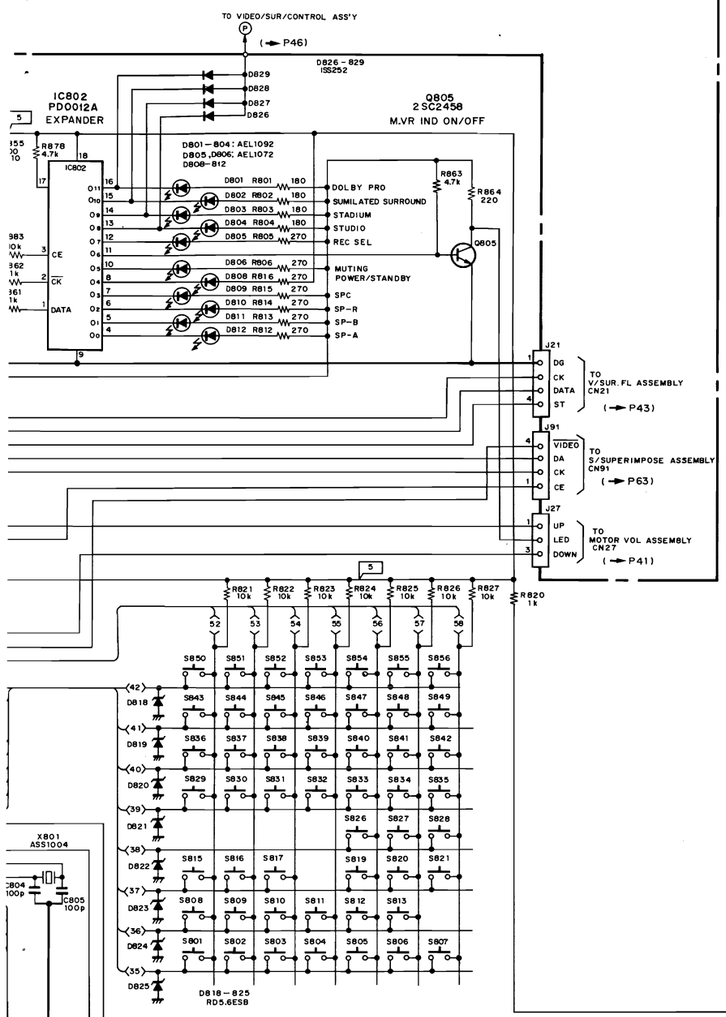

PIN CONNECTION

PIN No.	1	2	3	4	5	6	7	8	9	10	11	12	13	14	15	16	17	18	19	20	21	22	23	24	25
CONNECTION	F1	F1	NP	NP	V	G0	G1	G2	G3	G4	G5	G6	G7	G8	G9	G10	G11	NU	S15	S14	S13	S12	S11	S10	

PIN No.	26	27	28	29	30	31	32	33	34	35	36	37	38	39	40	41	42	43	44	45	46	47	48	49
CONNECTION	S9	S8	NP	S0	S1	S5	S7	S6	S4	S2	S3	NP	NP	NP	NP	NP	NP	NP	NP	NP	NP	NP	F2	F2

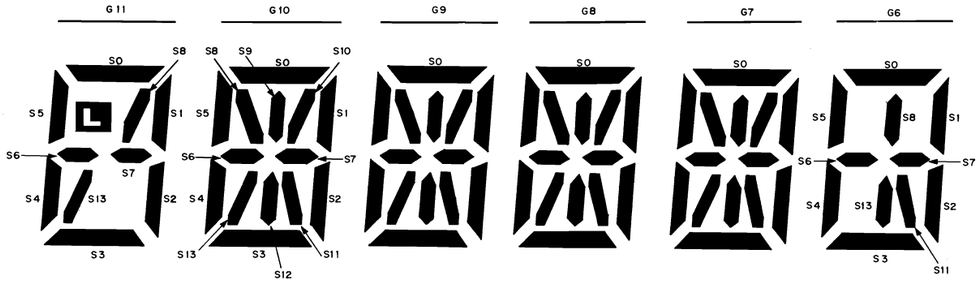

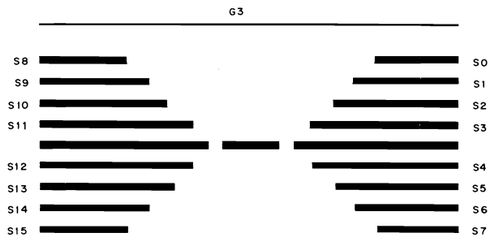

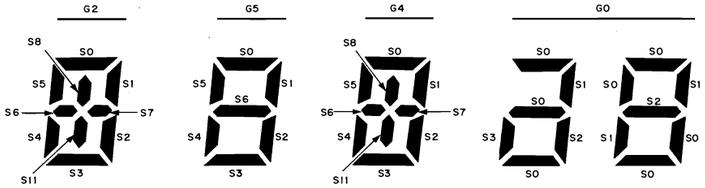

V801 AAV1075

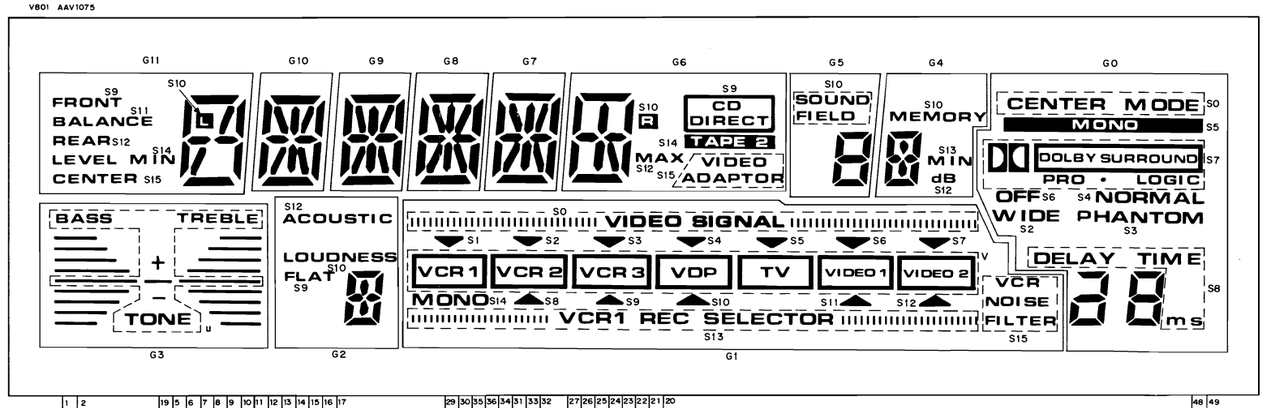

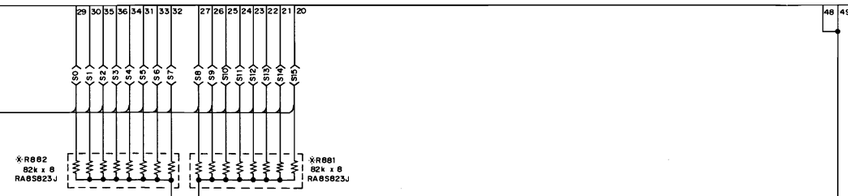

4.3 FRONT CONTROL ASSEMBLY

- View from component side

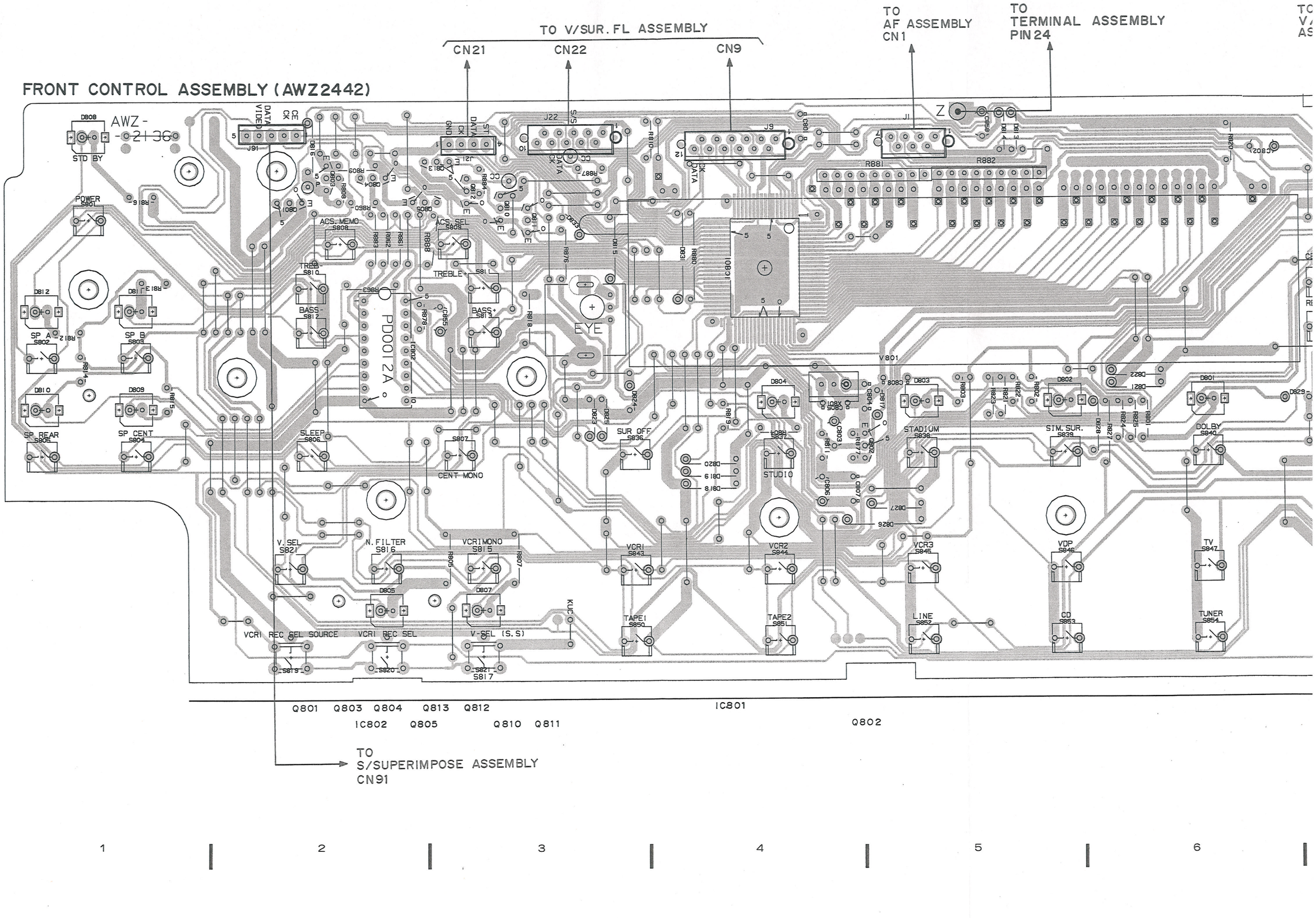

TO V/SUR. FL ASSEMBLY
CN22
CN9

TO
AF ASSEMBLY
CN1

TO
TERMINAL ASSEMBLY
PIN 24

TO
V/SUR. FL
ASSEMBLY PIN P

TO
MOTOR-VOL ASSEMBLY
CN27

TO
V/SUR. FL
ASSEMBLY CN55

TO
AF ASSEMBLY
CN56

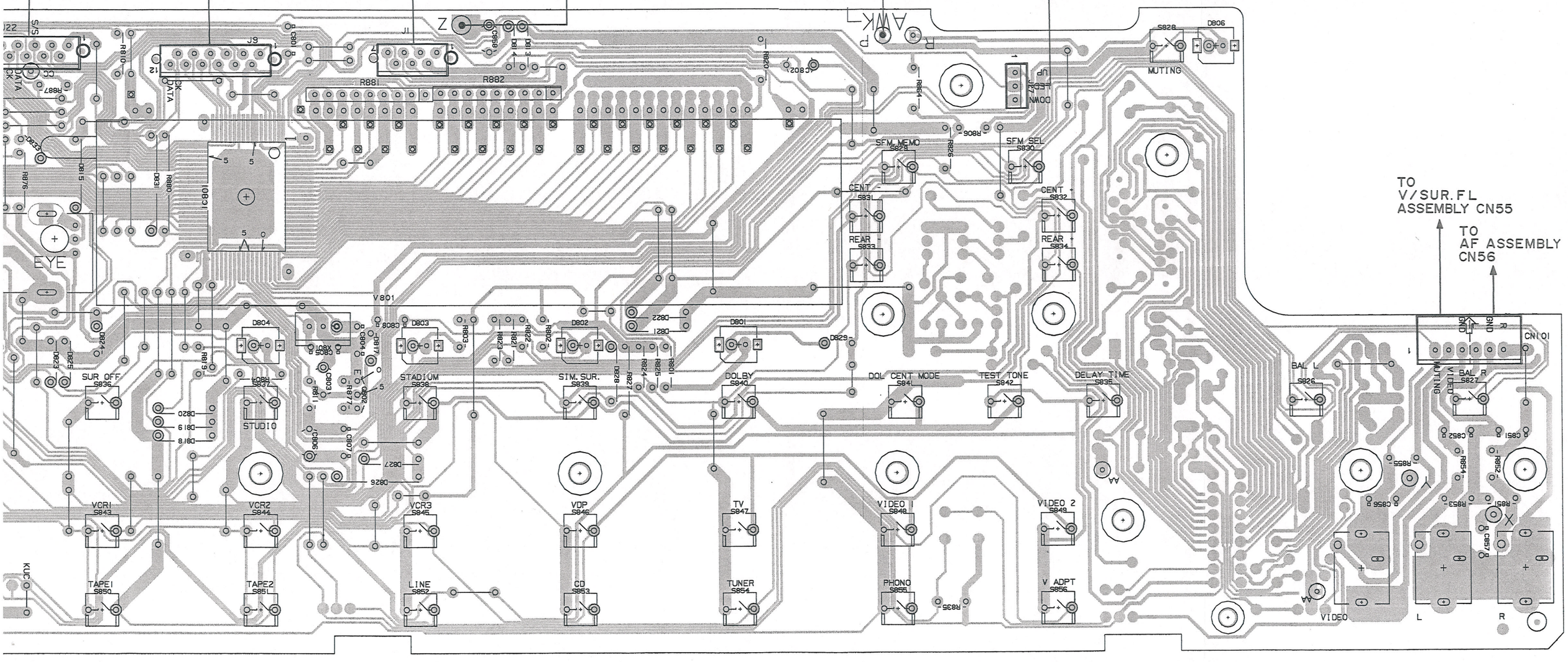

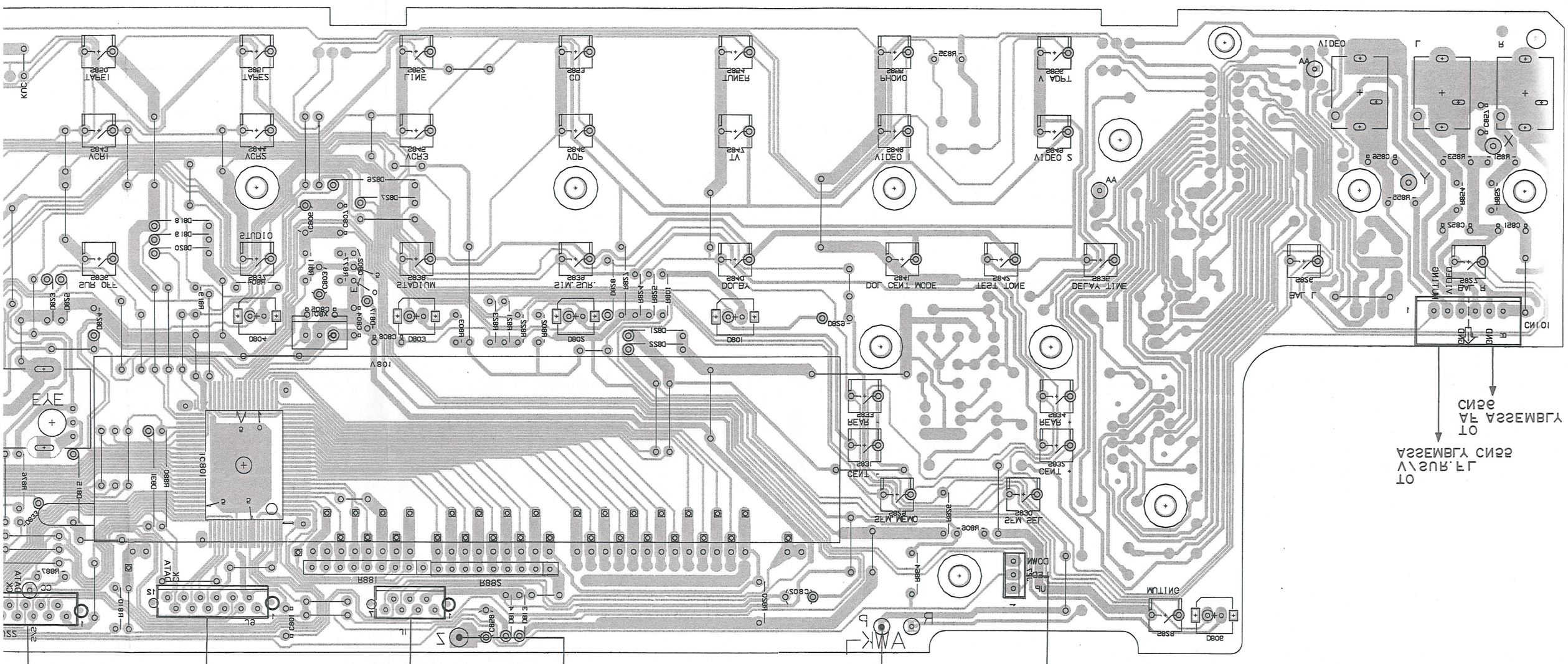
TAPE1
TAPE2
LINE
CD
TUNER
PHONO
V ADPT
VIDEO 1
VIDEO 2
VIDEO
L
R
AA
STUDIO
SUR OFF
STADIUM
SIM. SUR.
DOLBY
DOL CENT MODE
TEST TONE
DELAY TIME
BAL L
BAL R
MUTING
CENT
REAR
SFM MEMO
SFM SEL
DOWN
CN101
GND
L
GND
R
CN55
TO V\SUR. P.C ASSEMBLY
CN9
TO AF ASSEMBLY
CN1
TO TERMINAL ASSEMBLY
PIN 24
TO ASSEMBLY PIN P
TO V\SUR. P.C
CN57
TO MOTOR-VOL ASSEMBLY
TO AF ASSEMBLY
CN56
TO V\SUR. P.C ASSEMBLY

4.3 FRONT CONTROL ASSEMBLY

• View from soldering side

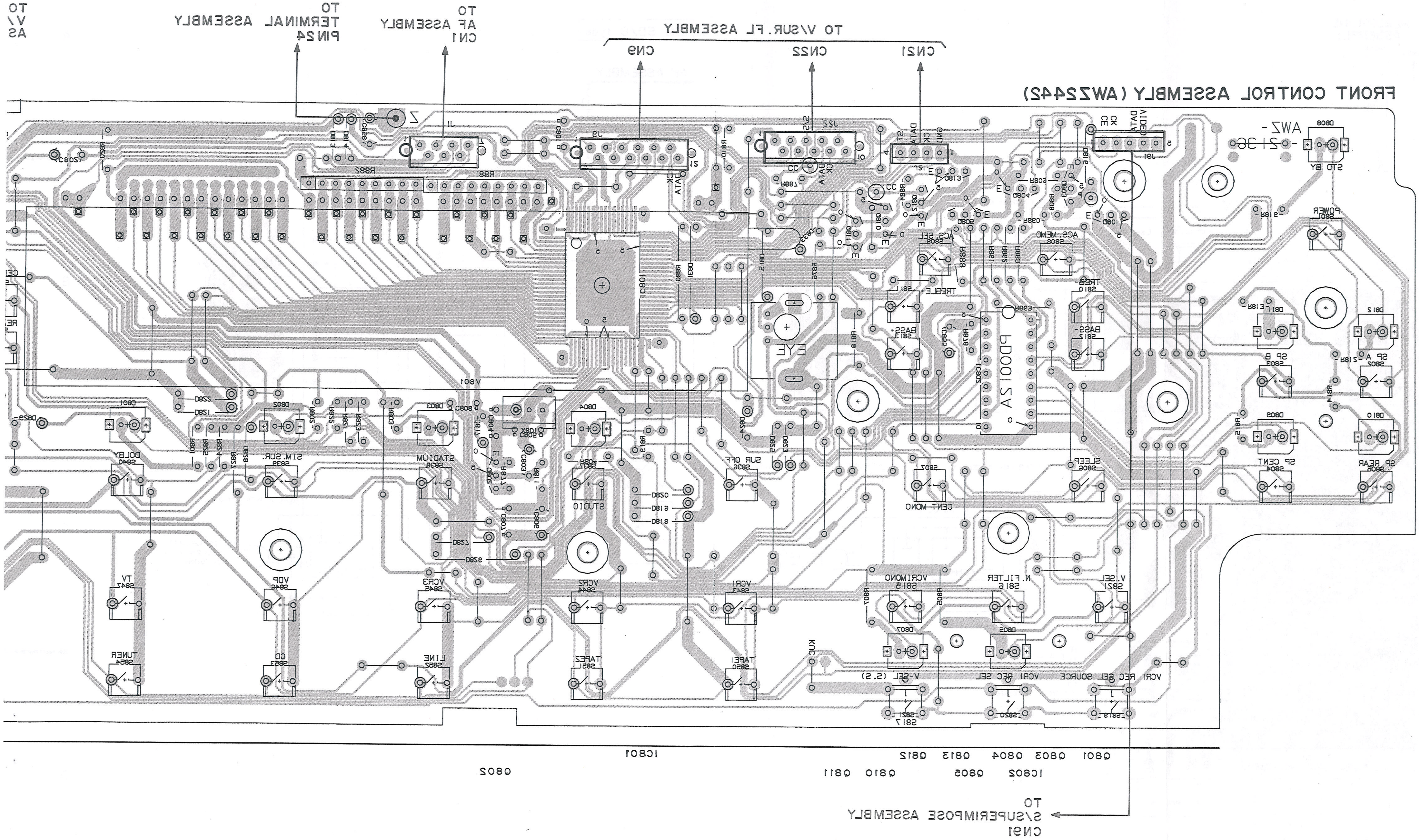

A B C D

1 2 3 4 5 6

4.4 AF, HEADPHONE, MOTOR VOL, VOL IND AND TERMINAL ASSEMBLY

• View from soldering side

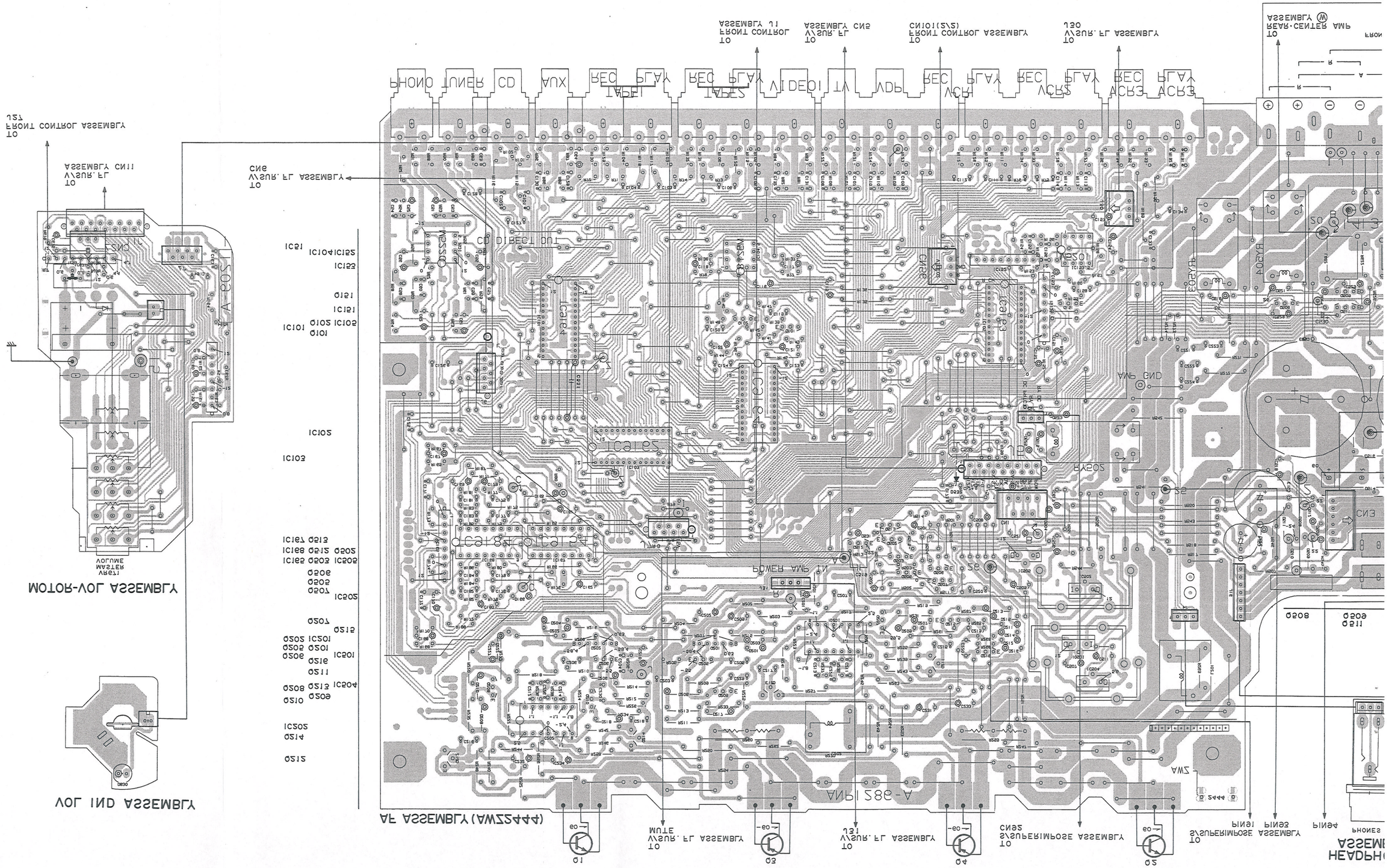

4.4 AF, HEADPHONE, MOTOR VOL, VOL IND AND TERMINAL ASSEMBLY

- View from component side

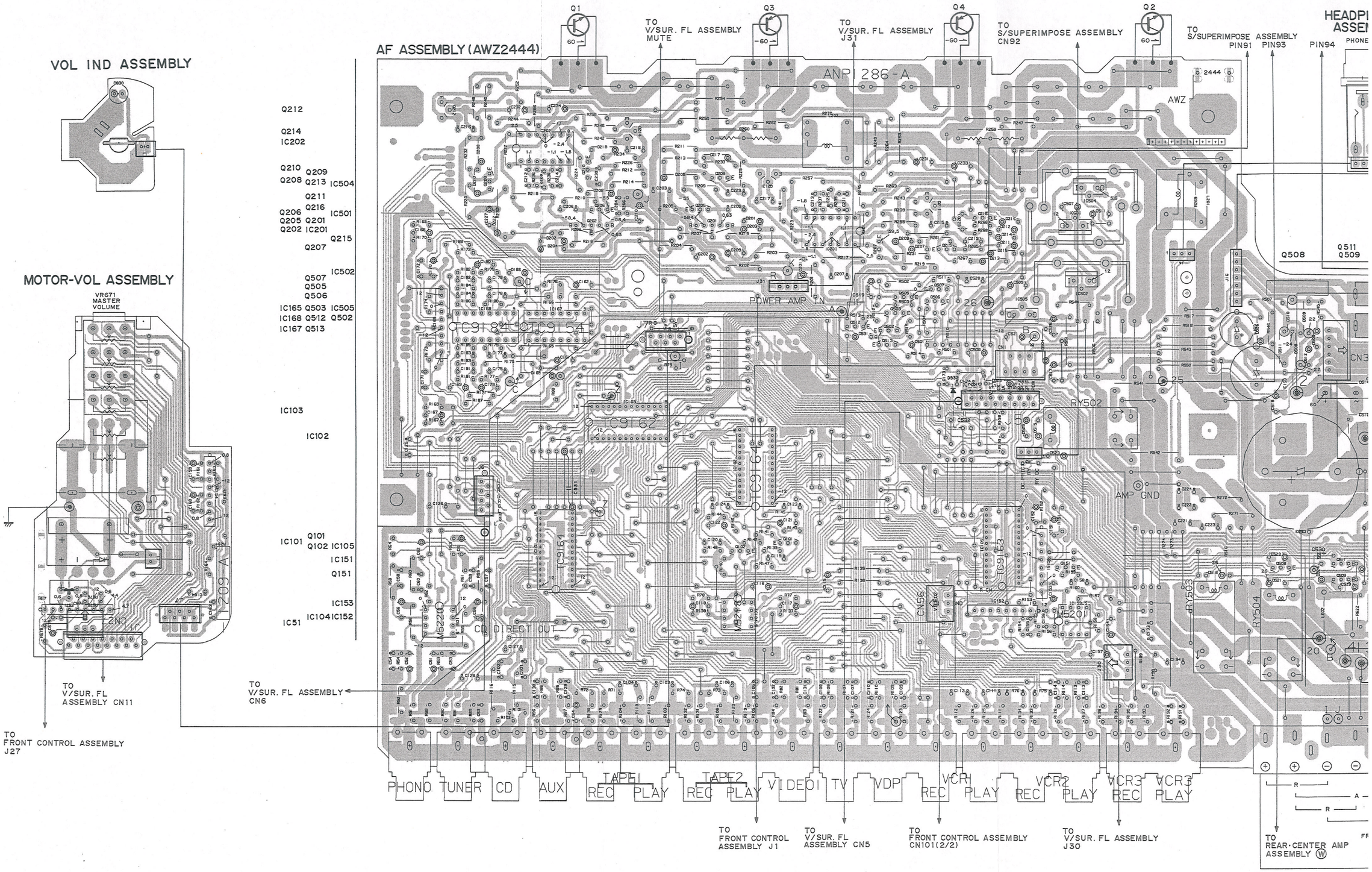

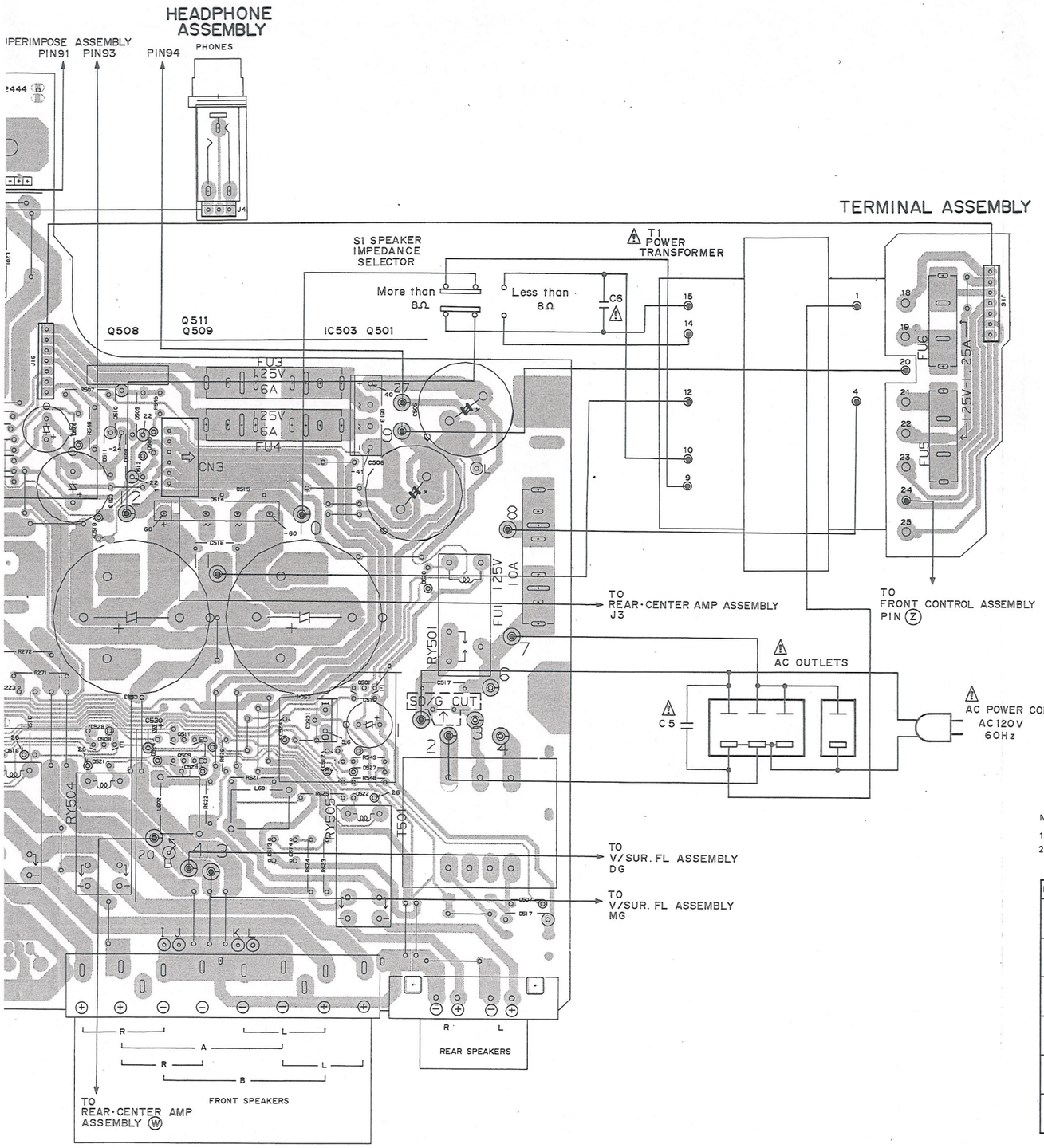

For SD/G type

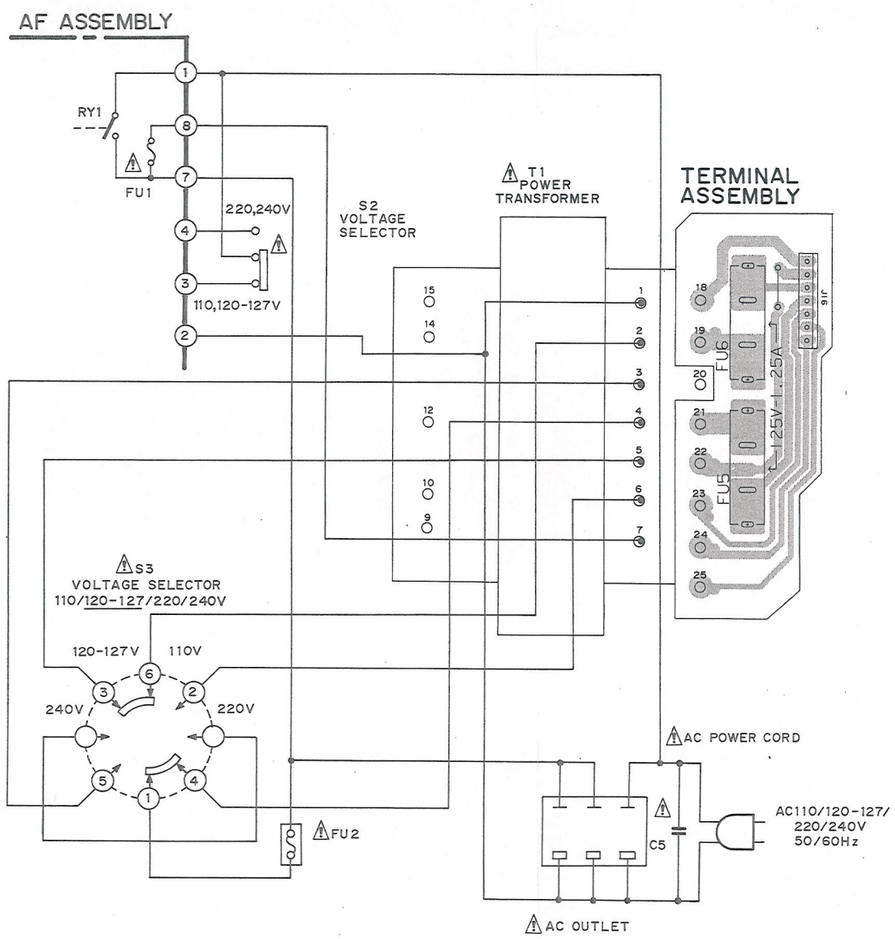

NOTE

1. This P.C.B connection diagram is viewed from the parts mounted side.
2. The parts which have been mounted on the board can be replaced with those shown with the corresponding wiring symbols listed in the following Table.

P.C.B. pattern diagram indication	Corresponding part symbol	Part Name
Q504 (E)	or	Transistor
Q215	or	Radiator type transistor
D203	D203	Diode
R237	R237	Resistor
C513		Capacitor (Polarity)
C518		Capacitor (Non-polarity)

Others

P.C.B. pattern diagram indication	Part Name
IC	IC
S	Switch
RY	Relay
L	Coil
F	Filter
VR	Variable resistor or Semi-fixed resistor

3. The capacitor terminal marked with ◎ (double circles) shows negative terminal.
4. The diode terminal marked with ◎ (double circles) shows cathode side.
5. The transistor terminal to which E is affixed shows the emitter.

4.4 AF, HEADPHONE, MOTOR VOL, VOL IND AND TERMINAL ASSEMBLY

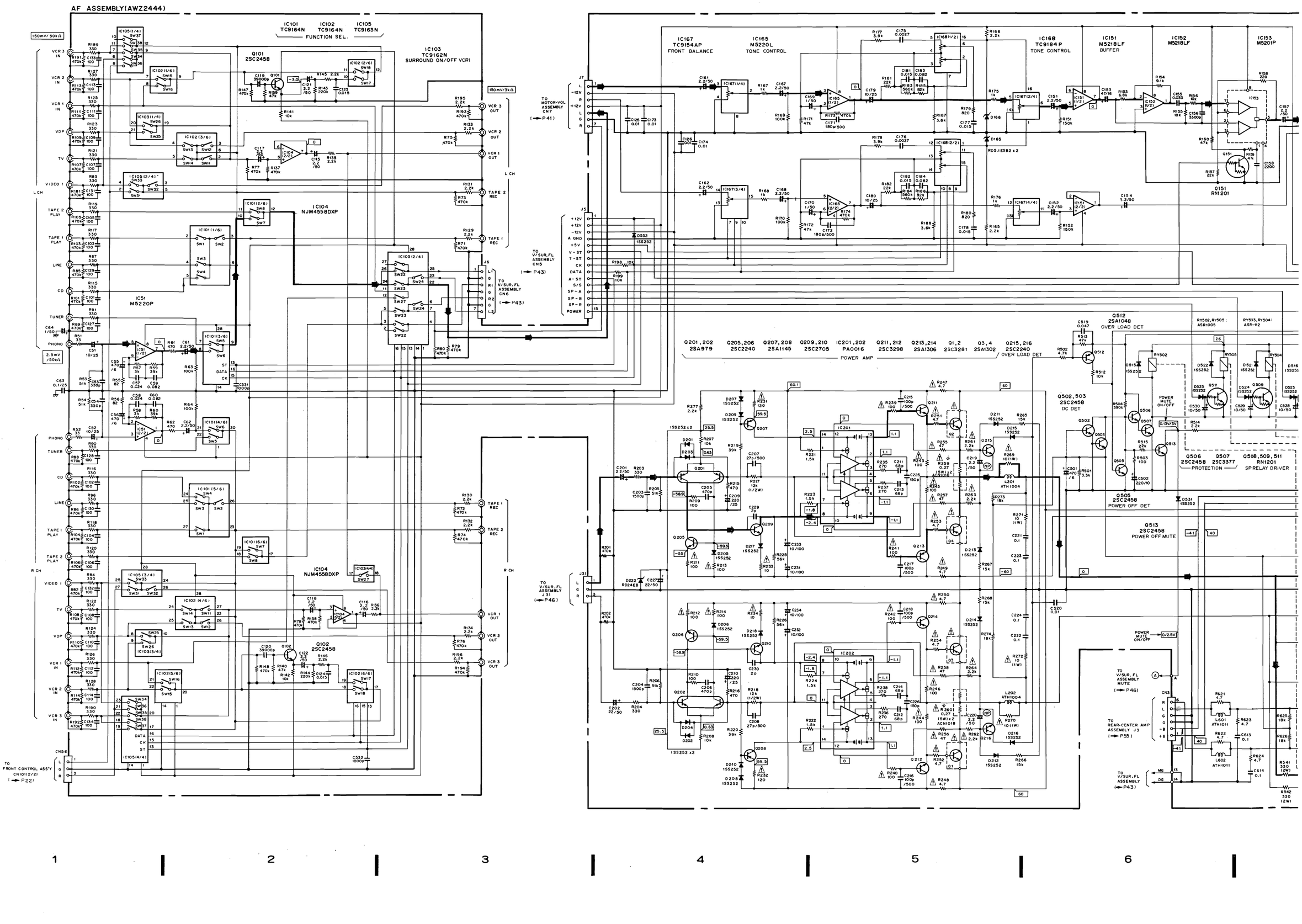

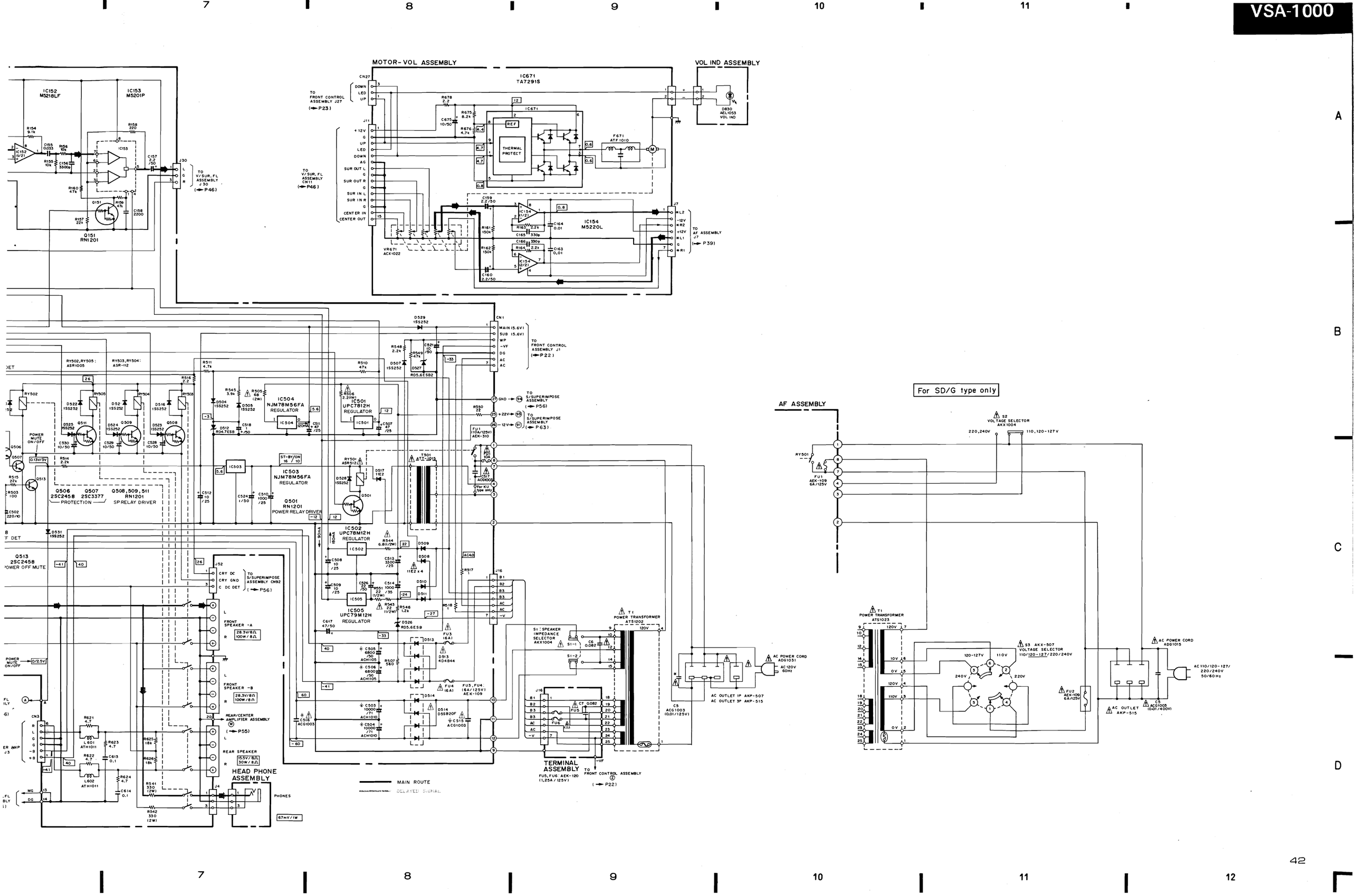
MOTOR-VOL ASSEMBLY
VOL IND ASSEMBLY
IC671 TA7291S
IC152 M5218LF
IC153 M5201P
IC154 M5220L
Q151 RN1201
IC504 NJM78M56FA REGULATOR
IC501 UPC7812H REGULATOR
IC503 NJM78M56FA REGULATOR
Q501 RN1201 POWER RELAY DRIVER
IC502 UPC78M12H REGULATOR
IC505 UPC79M12H REGULATOR
Q506 2SC2458 Q507 2SC3377 PROTECTION
Q508,509,511 RN1201 SP RELAY DRIVER
Q513 2SC2458 POWER OFF MUTE
HEAD PHONE ASSEMBLY
TERMINAL ASSEMBLY
AF ASSEMBLY
For SD/G type only
MAIN ROUTE
DELAYED SIGNAL

4.5 V/SUR · FL ASSEMBLY

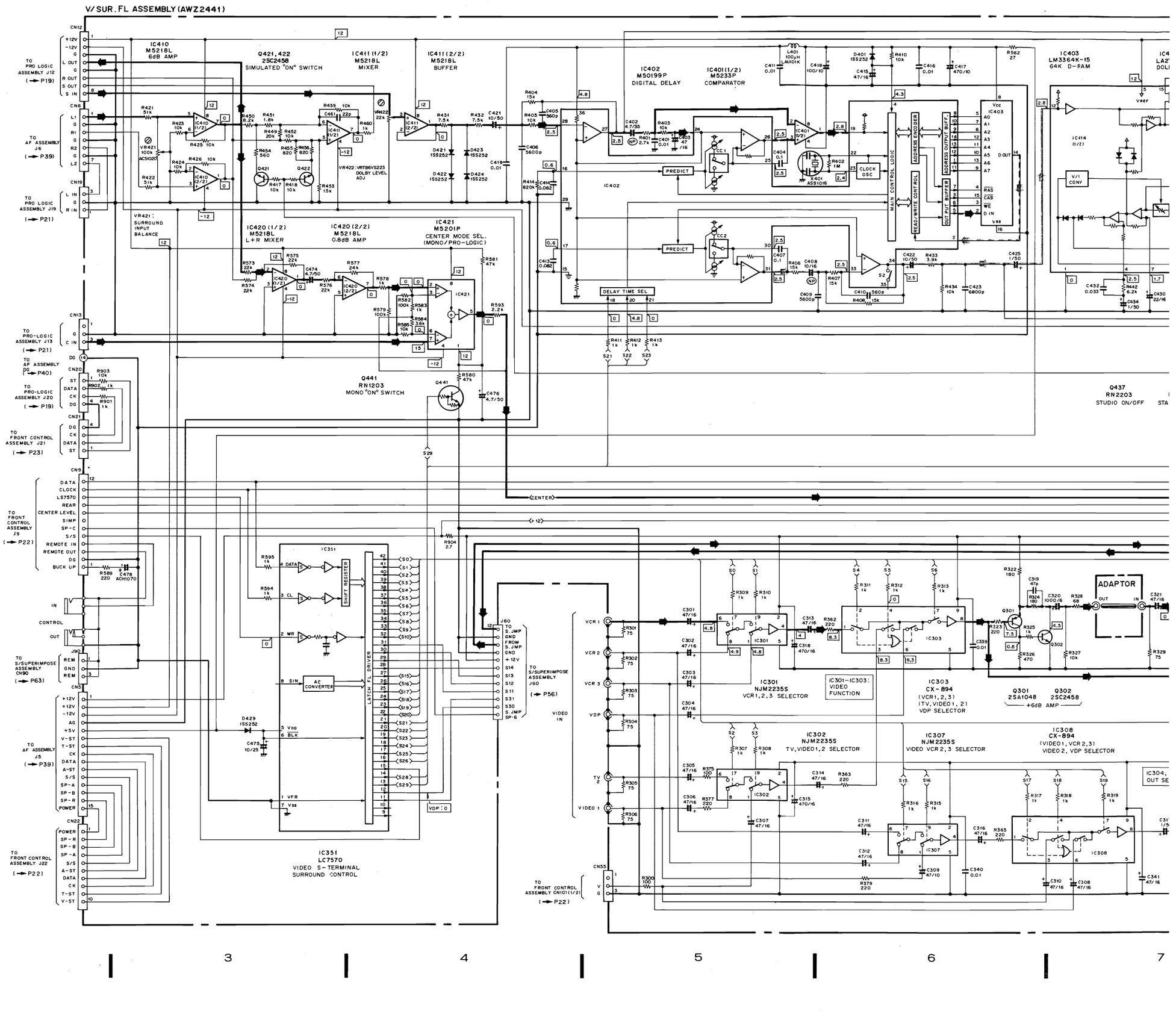

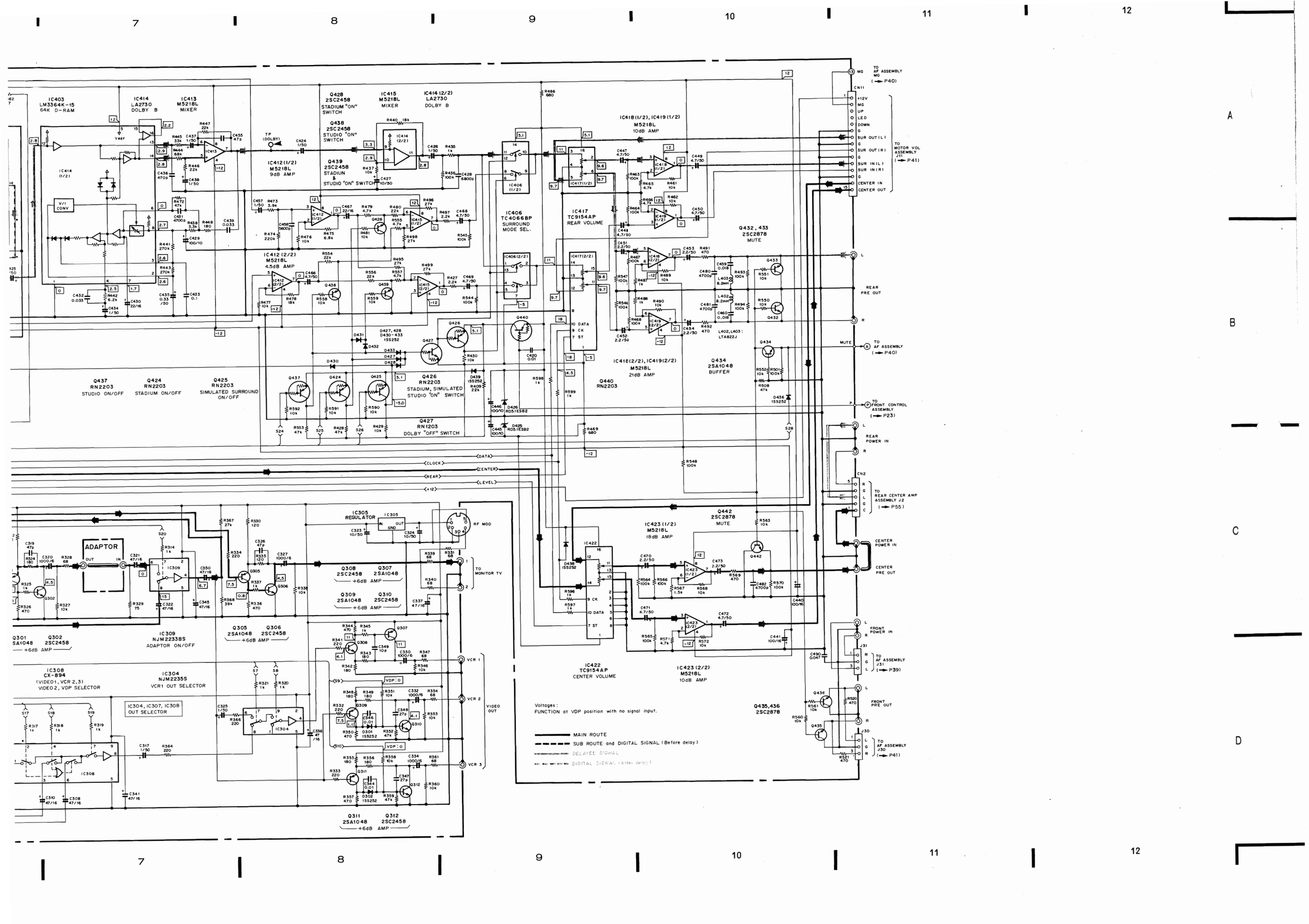

IC403 LM3364K-15 64K D-RAM
IC414 LA2730 DOLBY B
IC413 M5218L MIXER
Q428 2SC2458 STADIUM "ON" SWITCH
Q438 2SC2458 STUDIO "ON" SWITCH
Q439 2SC2458 STADIUN & STUDIO "ON" SWITCH
IC415 M5218L MIXER
IC414 (2/2) LA2730 DOLBY B
IC412 (1/2) M5218L 9dB AMP
IC412 (2/2) M5218L 4.5dB AMP
IC406 TC4066BP SURROUND MODE SEL.
IC417 TC9154AP REAR VOLUME
IC418 (1/2), IC419 (1/2) M5218L 10dB AMP
Q432, 433 2SC2878 MUTE
IC418 (2/2), IC419 (2/2) M5218L 21dB AMP
Q434 2SA1048 BUFFER
Q440 RN2203
Q437 RN2203 STUDIO ON/OFF
Q424 RN2203 STADIUM ON/OFF
Q425 RN2203 SIMULATED SURROUND ON/OFF
Q426 RN2203 STADIUM, SIMULATED STUDIO "ON" SWITCH
Q427 RN1203 DOLBY "OFF" SWITCH
IC305 REGULATOR
RF MOD
TO MONITOR TV
ADAPTOR
Q308 2SC2458 Q307 2SA1048 +6dB AMP
Q309 2SA1048 Q310 2SC2458 +6dB AMP
Q301 SA1048 Q302 2SC2458 +6dB AMP
IC309 NJM2233BS ADAPTOR ON/OFF
Q305 2SA1048 Q306 2SC2458 +6dB AMP
IC308 CX-894 (VIDEO1, VCR 2,3) VIDEO2, VDP SELECTOR
IC304 NJM2235S VCR1 OUT SELECTOR
IC304, IC307, IC308 OUT SELECTOR
Q311 2SA1048 Q312 2SC2458 +6dB AMP
VIDEO OUT
IC423 (1/2) M5218L 18dB AMP
Q442 2SC2878 MUTE
IC422 TC9154AP CENTER VOLUME
IC423 (2/2) M5218L 10dB AMP
Q435,436 2SC2878
TO AF ASSEMBLY MG (→ P40)
TO MOTOR VOL ASSEMBLY J11 (→ P41)
REAR PRE OUT
TO AF ASSEMBLY (→ P40)
TO FRONT CONTROL ASSEMBLY (→ P23)
REAR POWER IN
TO REAR CENTER AMP ASSEMBLY J2 (→ P55)
CENTER POWER IN
CENTER PRE OUT
FRONT POWER IN
TO AF ASSEMBLY J31 (→ P39)
FRONT PRE OUT
TO AF ASSEMBLY J30 (→ P41)
Voltages:
FUNCTION at VDP position with no signal input.
MAIN ROUTE
SUB ROUTE and DIGITAL SIGNAL (Before delay)
DELAYED SIGNAL
DIGITAL SIGNAL (After delay)

4.5 V/SUR · FL ASSEMBLY

- View from component side

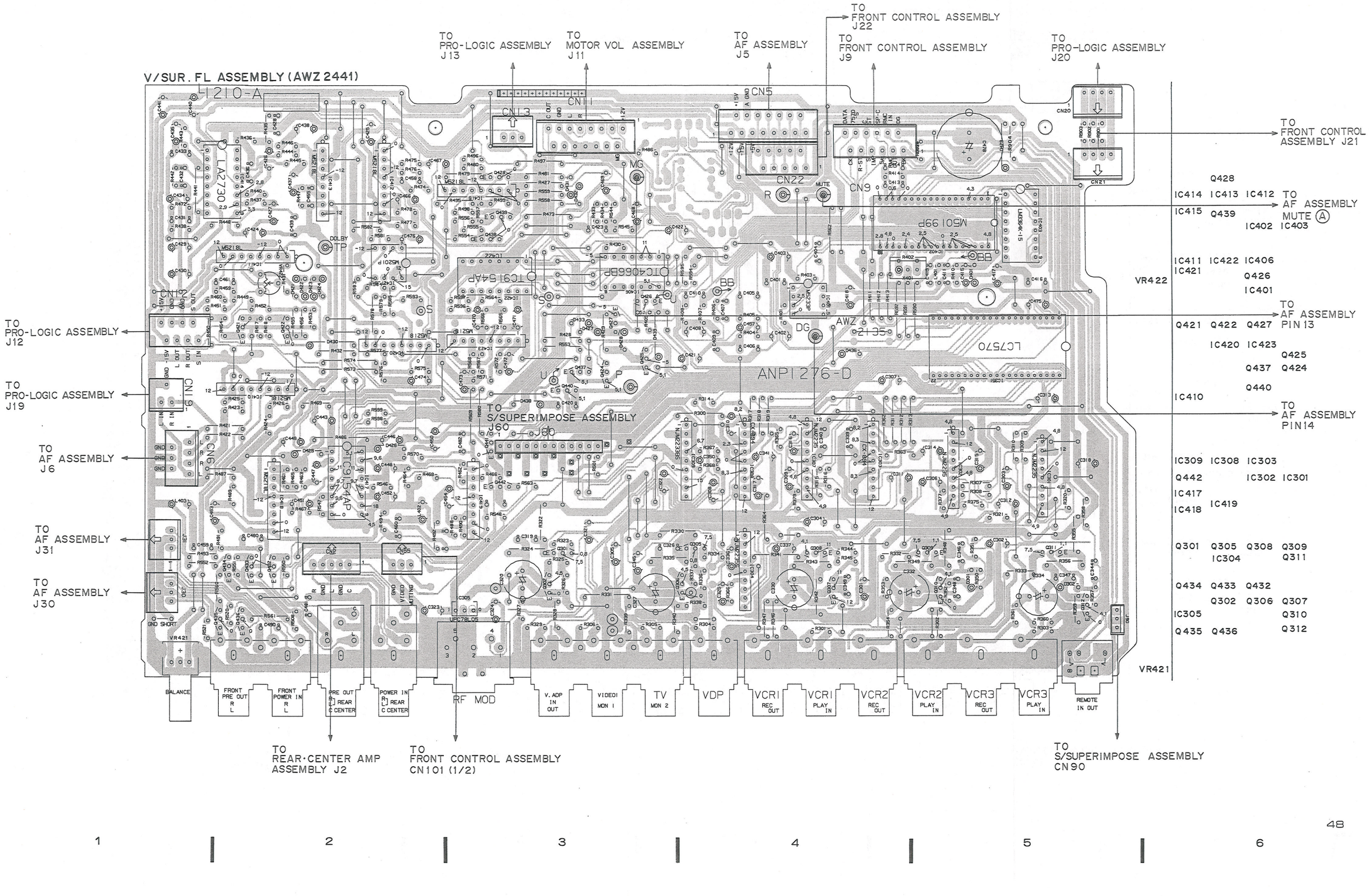

A-2 V\SUR. PT ASSEMBLY

• View from soldering side

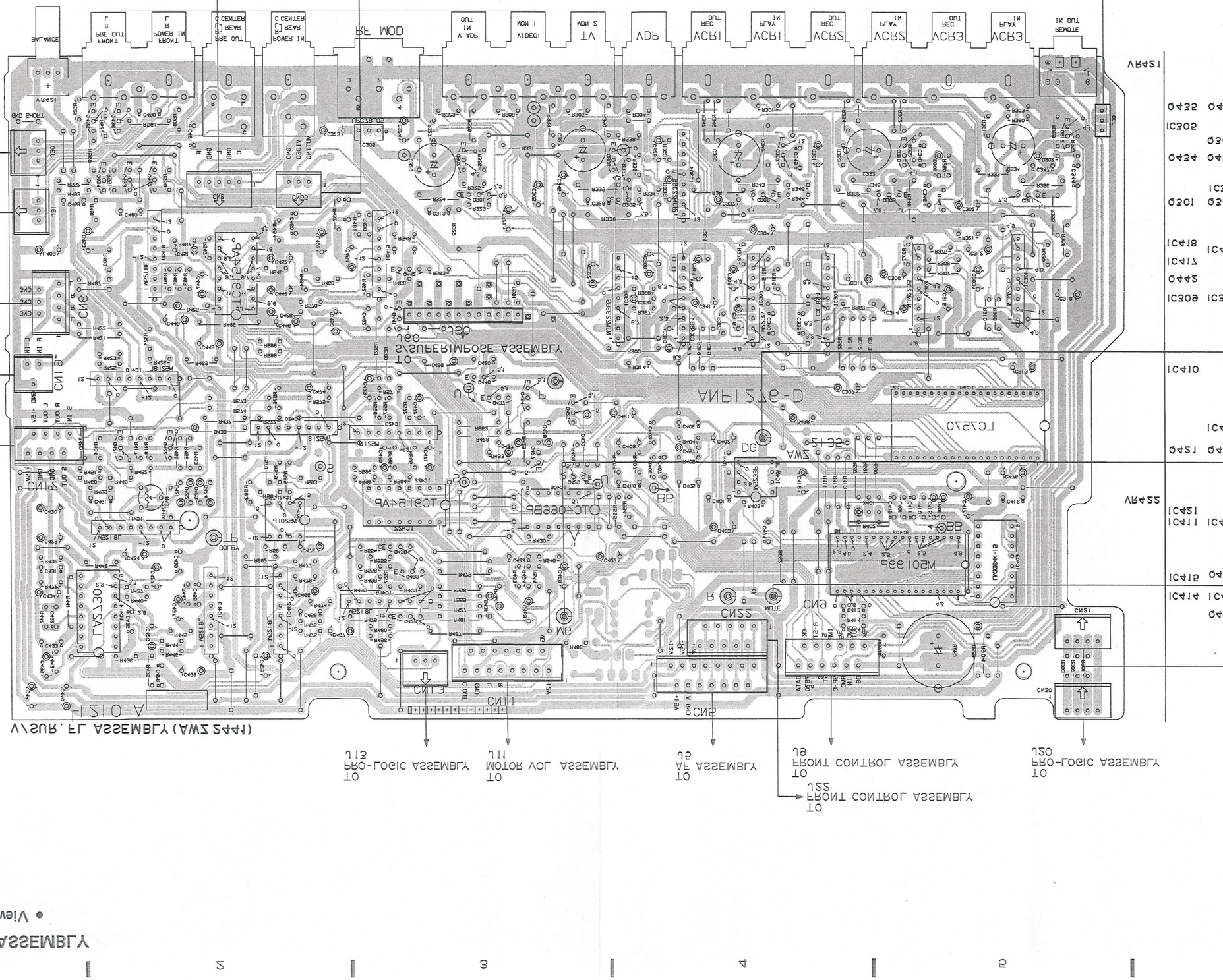

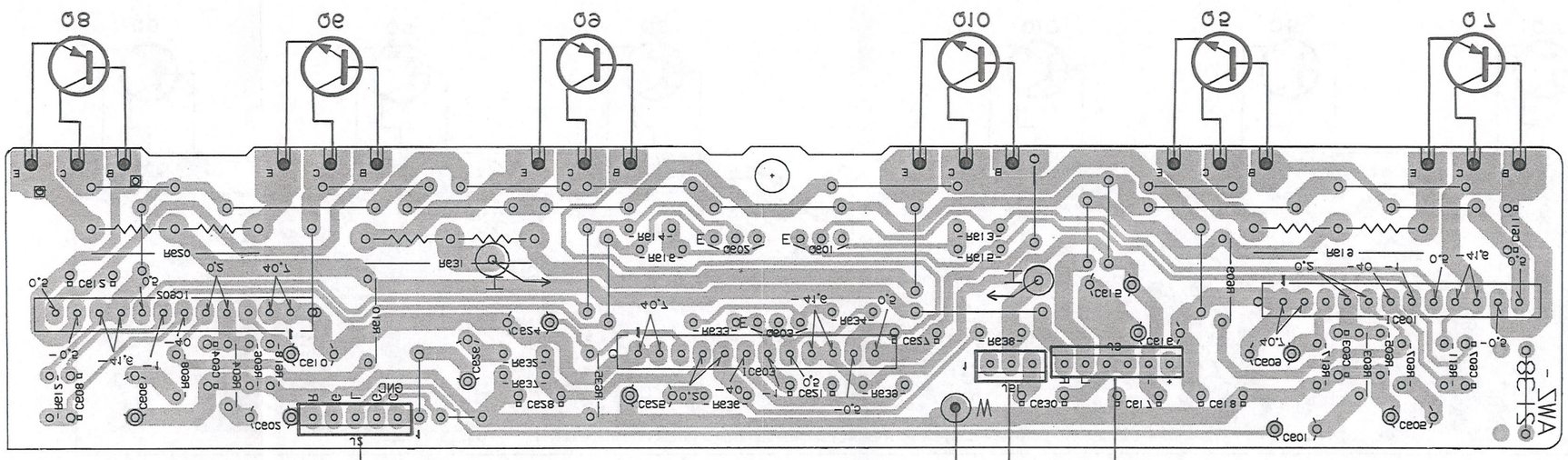

4.8 REAR\CENTER AMPLIFIER ASSEMBLY

• View from soldering side

4.6 REAR/CENTER AMPLIFIER ASSEMBLY

- View from component side

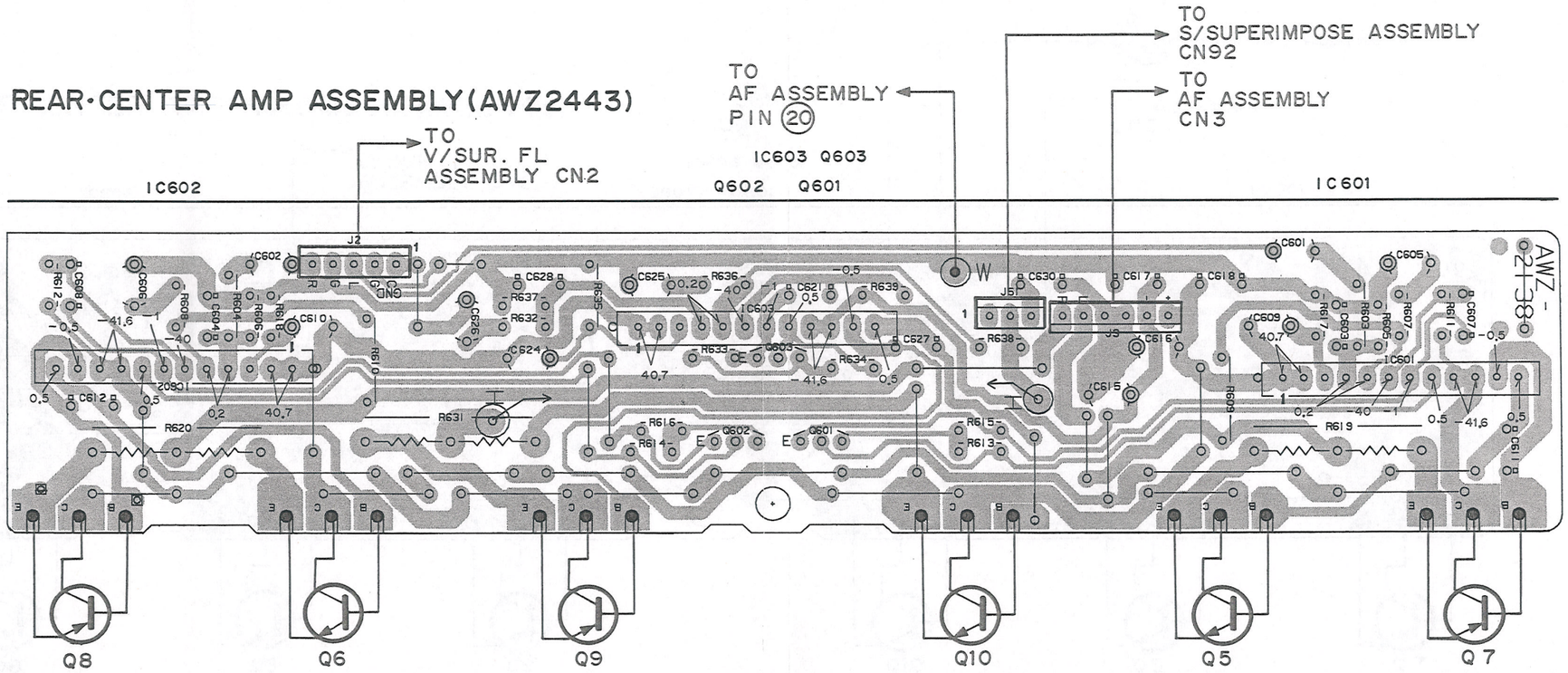

4.6 REAR/CENTER AMPLIFIER ASSEMBLY

REAR CENTER AMP ASSEMBLY (AWZ2443)

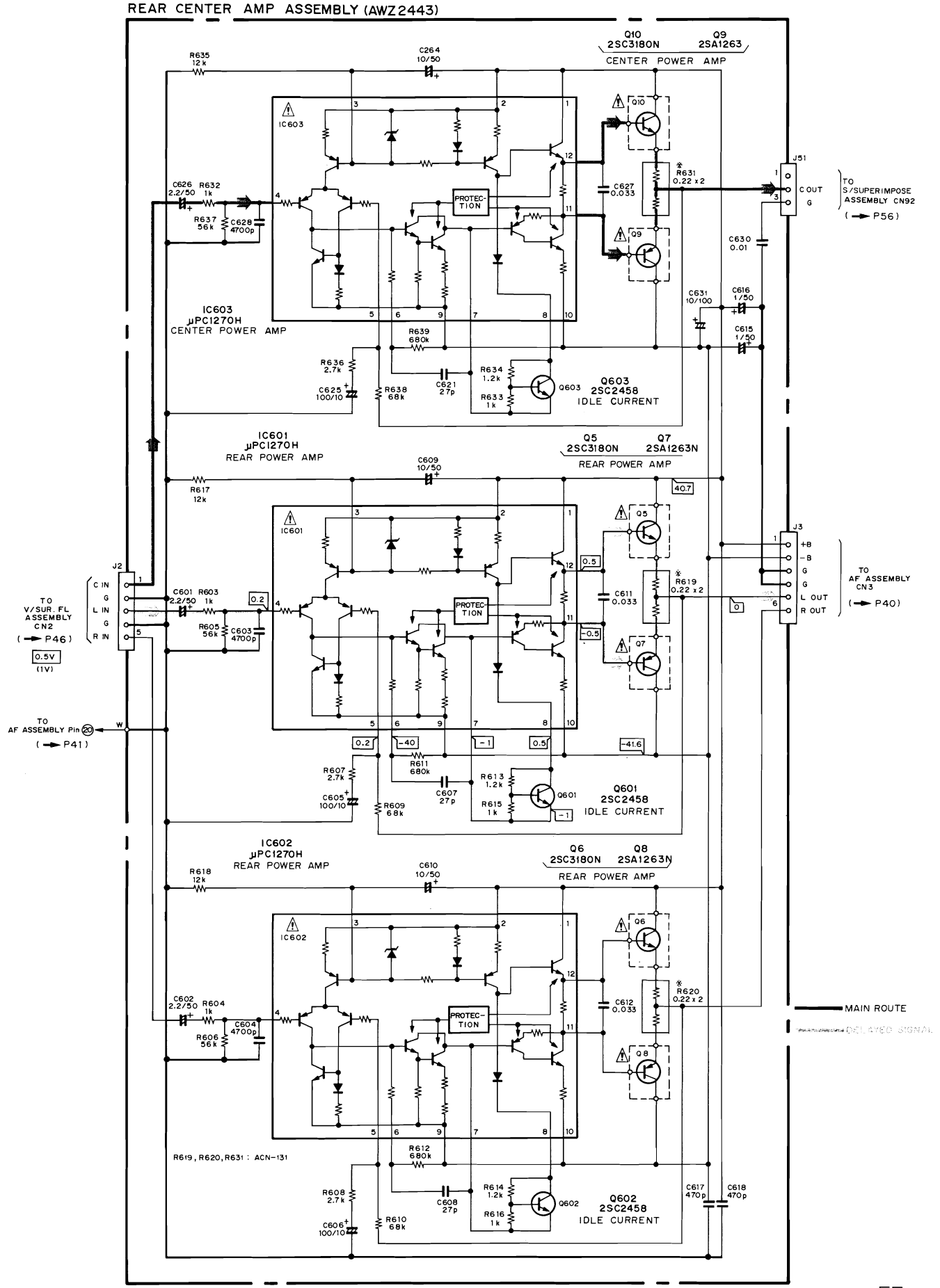

4.7 S/SUPERIMPOSE ASSEMBLY (1/2)

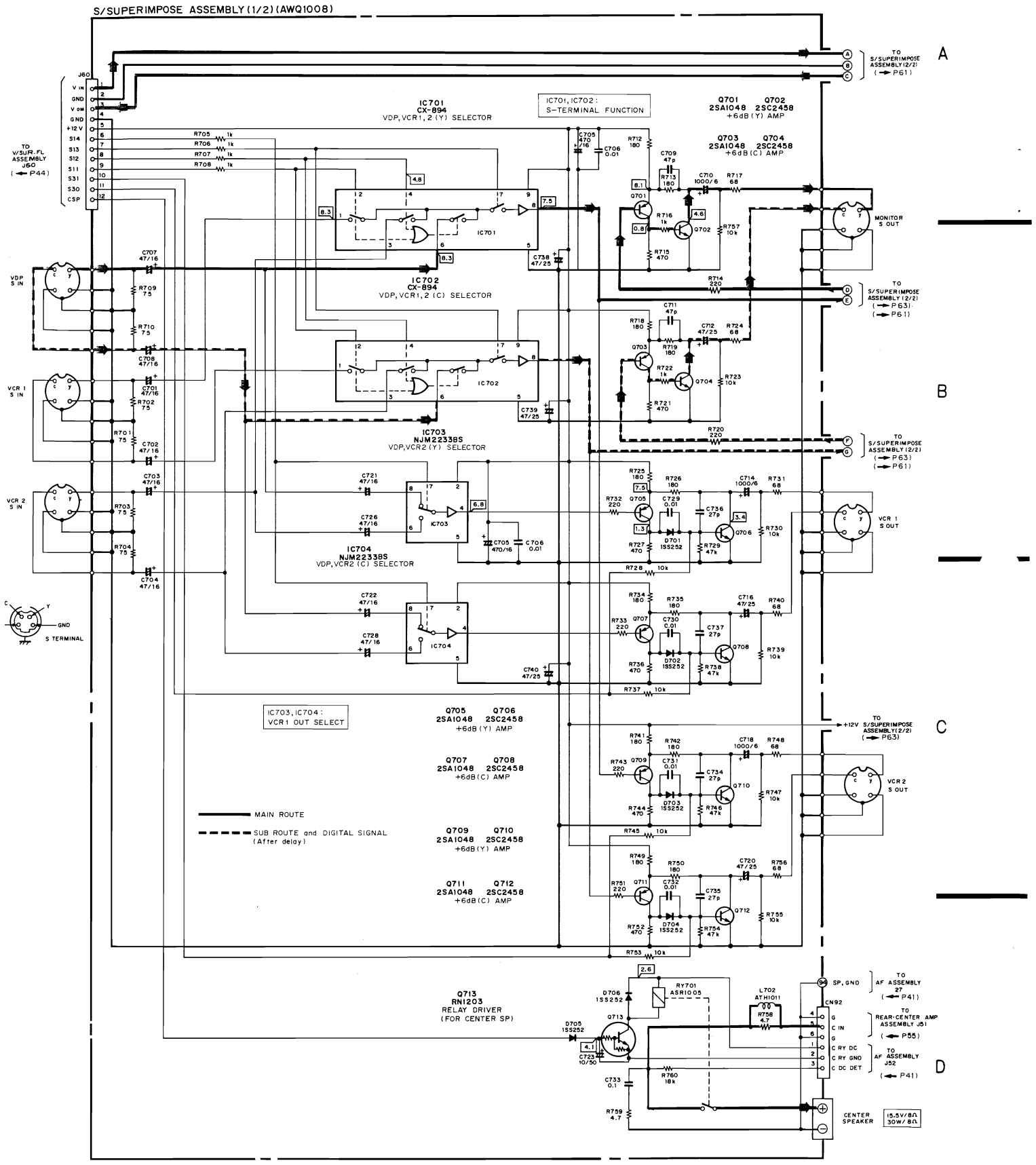

4.7 S/SUPERIMPOSE ASSEMBLY

- View from component side

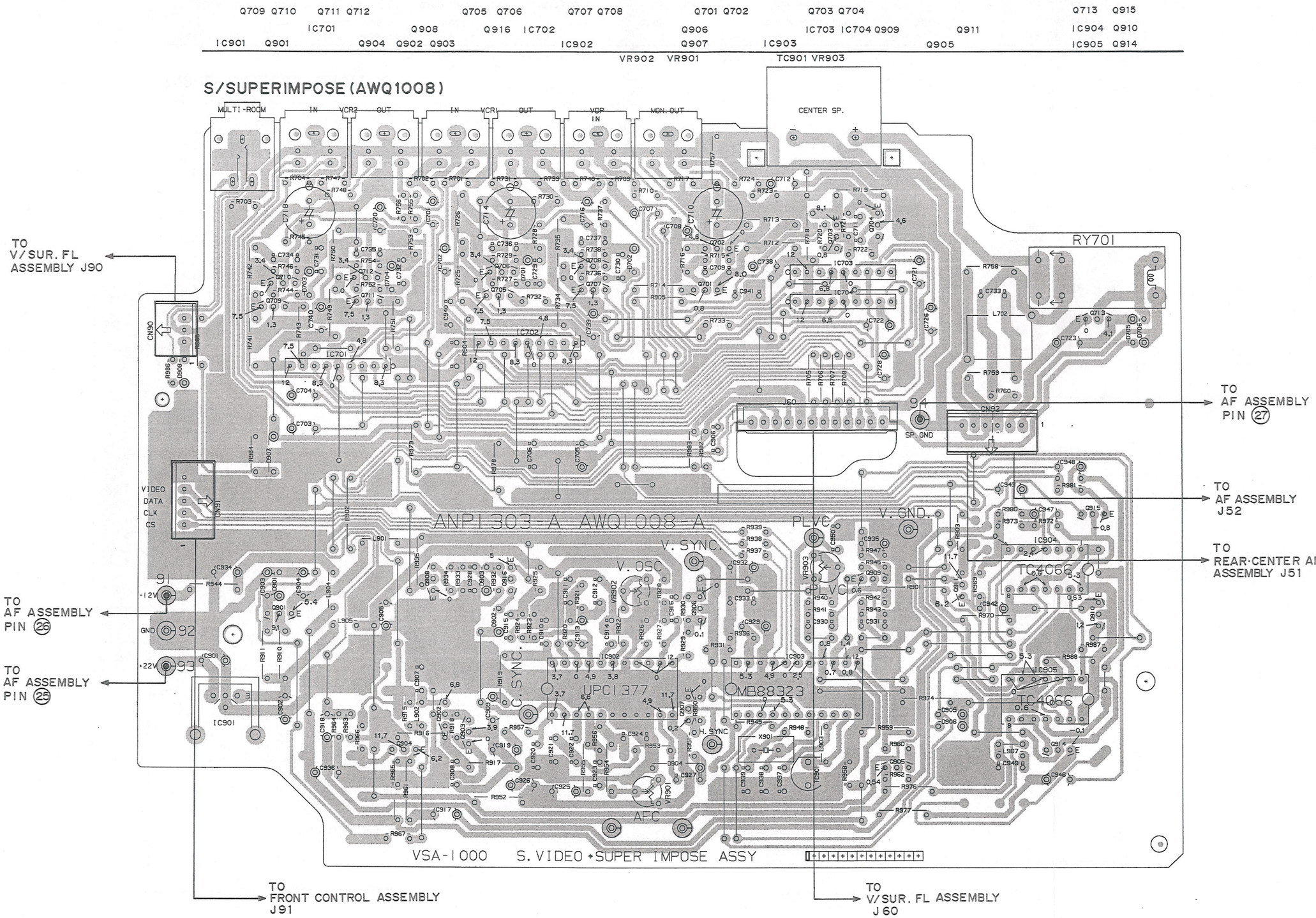

4.7 S-VIDEO/SUPERIMPOSE ASSEMBLY

● View from soldering side

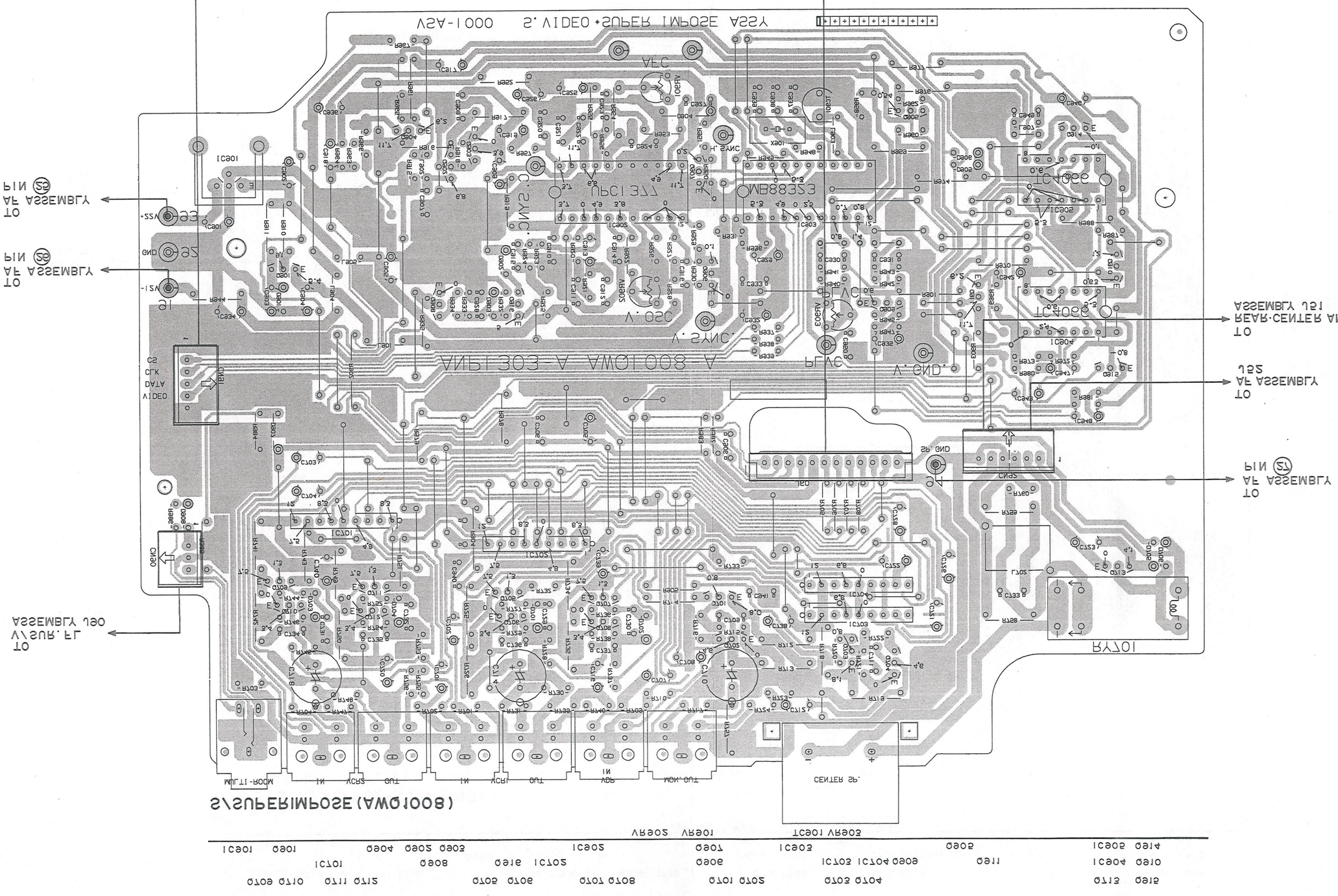

• S/SUPERIMPOSE ASSEMBLY (2/2)

S/SUPERIMPOSE ASSEMBLY (2/2) (AWQ1008)

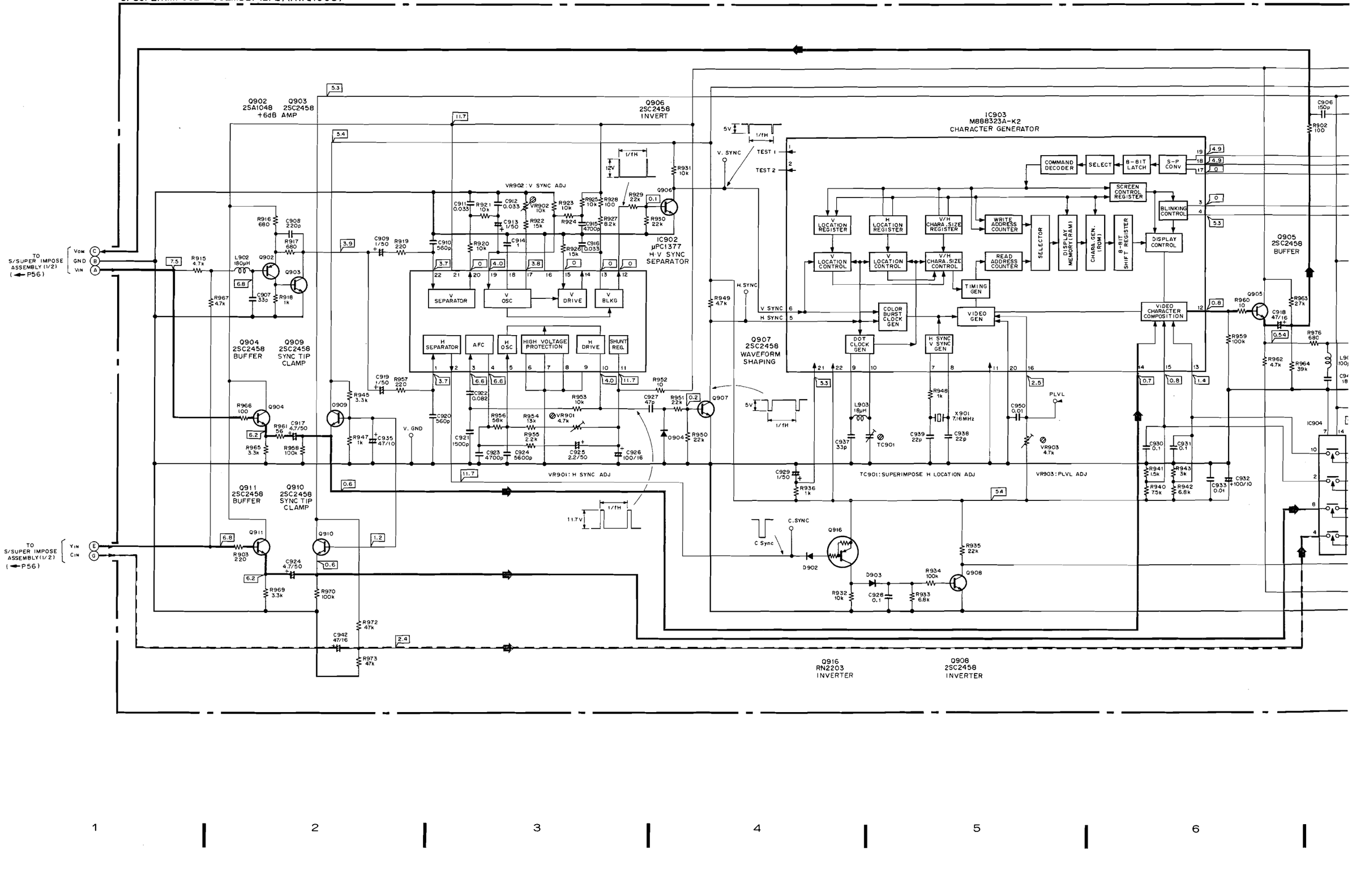

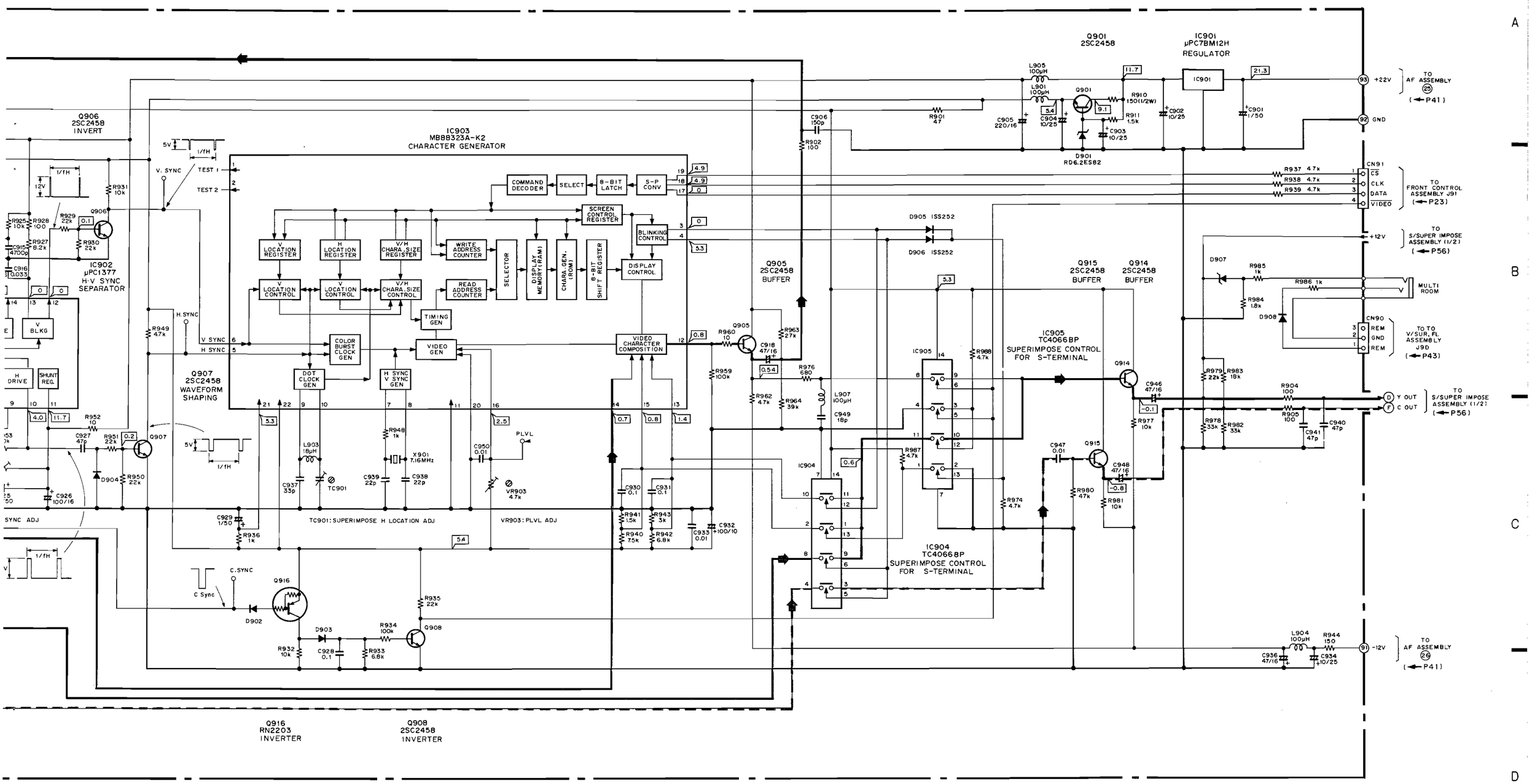
Q906
2SC2458
INVERT
IC903
MB88323A-K2
CHARACTER GENERATOR
Q901
2SC2458
IC901
μPC7BM12H
REGULATOR
IC902
μPC1377
H·V SYNC
SEPARATOR
Q907
2SC2458
WAVEFORM
SHAPING
Q905
2SC2458
BUFFER
Q915
2SC2458
BUFFER
Q914
2SC2458
BUFFER
IC905
TC4066BP
SUPERIMPOSE CONTROL
FOR S-TERMINAL
IC904
TC4066BP
SUPERIMPOSE CONTROL
FOR S-TERMINAL
TC901: SUPERIMPOSE H LOCATION ADJ
VR903: PLVL ADJ
Q916
RN2203
INVERTER
Q908
2SC2458
INVERTER
TO AF ASSEMBLY
TO FRONT CONTROL ASSEMBLY J91
TO S/SUPER IMPOSE ASSEMBLY (1/2)
TO TO V/SUR, FL ASSEMBLY J9D
TO S/SUPER IMPOSE ASSEMBLY (1/2)
TO AF ASSEMBLY

5. ELECTRICAL PARTS LIST

NOTES :

- Parts without part number cannot be supplied.
- Parts marked by "⊙" are not always kept in stock. Their delivery time may be longer than usual or they may be unavailable.
- The ⚠ mark found on some component parts indicates the impotance of the safety factor of the part. Therefore, when replacing, be sure to use parts of identical designation.
- When ordering resistors, first convert resistance values into code form as shown in the following examples.

Ex.1 When there are 2 effective digits (any digit apart from 0), such as 560 ohm and 47k ohm (tolerance is shown by J=5%, and K=10%).

560 Ω	56×10^{1}	561	RD1/4PS 5 6 1 J
47k Ω	47×10^{3}	473	RD1/4PS 4 7 3 J
0.5 Ω	0R5		RN2H 0 R 5 K
1 Ω	010		RS1P 0 1 0 K

Ex.2 When there are 3 effective digits (such as in high precision metal film resistors).

5.62k Ω	562×10^{1}	5621	RN1/4SR 5 6 2 1 F

Miscellaneous Parts

P.C. BOARD ASSEMBLY

Mark	Symbol & Description	Part No.
	PRO-LOGIC assembly	AWX1029
	S/SUPERINPOSE assembly	AWQ1008
	V/SUR. FL assembly	AWZ2441
	FRONT CONTROL assembly	AWZ2442
	REAR • CENTER AMP assembly	AWZ2443
	AF assembly	AWZ2444
	VOL IND assembly	
	TERMINAL assembly	
	HEADPHONE assembly	
	MOTOR-VOL assembly	

OTHERS

Mark	Symbol & Description	Part No.
⚠	Q7-Q9	2SA1263N
⚠	Q3, Q4	2SA1302
⚠	Q5, Q6, Q10	2SC3180N
⚠	Q1, Q2	2SC3281
⚠	C5 (0.01 μ/AC125V)	ACG1003
⚠	C6, C7	CQMXA823J100
⚠	T1 Power transformer	ATS1202
⚠	S1 Impedance selector	AKX1004
	Jumper plug	AKM1019
⚠	1P AC OUTLET	AKP-507
⚠	3P AC OUTLET	AKP-515
⚠	FU3, FU4 Fuse (6A)	AEK-109
⚠	FU5, FU6 Fuse (1.25A)	AEK-120
⚠	FU1 Fuse (10A)	AEK-310
⚠	AC Power cord	ADG1031

PRO-LOGIC Assembly (AWX1029)

SEMICONDUCTORS

Mark	Symbol & Description	Part No.
	IC1123, IC1131	BU4066BL
	IC1130	CXD1067P
	IC1102-IC1105, IC1107-IC1109, IC1112, IC1117, IC1118-IC1122, IC1124-IC1126, IC1128	M5218PF
	IC1113-IC1116	M5222L
	IC1106, IC1111	NJM082D
	IC1127	TC4011UBP
	IC1129	TC4052BP
	IC1101, IC1110	TC4066BP
	Q1120-Q1122, Q1127	RN1203
	Q1119, Q1124, Q1125	RN2203
	Q1101-Q1106, Q1110-Q1115, Q1123, Q1126	2SA1048
	Q1108, Q1117	2SC2259
	Q1109, Q1118	2SC2458
	Q1107, Q1116	2SJ74
	D1119	RD2.7ESB
	D1115	RD5.6ESB
	D1113, D1114	RD6.8ESB2
	D1101-D1112, D1120	1SS252

CAPACITORS

Mark	Symbol & Description	Part No.
	C1173, C1174	CCMSL100D50
	C1141-C1144, C1171	CCMSL220J50
	C1111, C1149, C1150, C1153, C1163, C1170	CCMSL330J50
	C1115, C1122	CCMSL470J50
	C1157	CEANP010M50
	C1113, C1124, C1125	CEAS010M50
	C1151, C1152, C1154-C1156, C1160, C1168, C1169, C1172	CEAS100M50
	C1179	CEAS101M10
	C1177	CEAS101M16
	C1126, C1127	CEAS2R2M50
	C1140	CEAS331M10
	C1164, C1165	CEAS331M16
	C1130-C1139	CEAS4R7M50
	C1166, C1167	CEAS470M10
	C1112	CEAS470M16
	C1158	CFTXA103J50
	C1101-C1104, C1128, C1129, C1145, C1146, C1148	CFTXA104J50
	C1107, C1108, C1117, C1119	CFTXA223J50
	C1147, C1161, C1162	CFTXA224J50
	C1109, C1110, C1118, C1120	CFTXA334J50
	C1178	CKDYB222K50
	C1159	CKMYB152K50
	C1114, C1116, C1121, C1123	CKMYB471K50
	C1105, C1106	CKMYB681K50
	C1175, C1176	CKMYF472Z50

RESISTORS

Mark	Symbol & Description	Part No.
	R1113, R1114, R1130-R1132, R1134, R1135, R1140, R1141, R1148-R1150, R1165-R1168, R1170, R1171, R1175-R1180, R1182, R1183, R1187, R1188, R1190, R1192, R1194, R1196, R1198, R1200, R1202, R1204-R1244	RN¼PC□□□F
	Other resistors	RD⅛PM□□□J

S/SUPERINPOSE Assembly (AWQ1008)

SEMICONDUCTORS

Mark	Symbol & Description	Part No.
	IC701, IC702	CX-894
	IC903	MB88323A-K2
	IC703, IC704	NJM2233BS
	IC904, IC905	TC4066BP
	IC902	UPC1377C
	IC901	UPC78M12H
	Q713	RN1203
	Q916	RN2203
	Q701, Q703, Q705, Q707, Q709, Q711, Q902	2SA1048
	Q702, Q704, Q706, Q708, Q710, Q712, Q901, Q903-Q911, Q914, Q915	2SC2458
	D901	RD5.6ESB2
	D907	RD6.2ESB2
	D701-D706, D902-D906, D908	1SS252

RELAY

Mark	Symbol & Description	Part No.
	RY701 Relay	ASR1005

COILS

Mark	Symbol & Description	Part No.
	L702 AF choke coil	ATH1011
	L901, L904, L905, L907 Inductor	LAU101K
	L903 Inductor	LAU180K
	L902 Inductor	LAU181K

CAPACITORS

Mark	Symbol & Description	Part No.
	TC901	ACM-020
	C906	CCCSL151J50
	C949	CCCSL180J50
	C938, C939	CCCSL220J50
	C908	CCCSL221J50
	C907, C937	CCCSL330J50
	C927, C940, C941	CCCSL470J50
	C734-C737	CCMSL270J50
	C709, C711	CCMSL470J50
	C901, C909, C913, C919, C929	CEAS010M50
	C902-C904, C934	CEAS100M25
	C723	CEAS100M50
	C932	CEAS101M10
	C926	CEAS101M16
	C710, C714, C718	CEAS102M6
	C925	CEAS2R2M50
	C905	CEAS221M16
	C917, C942	CEAS4R7M50
	C935	CEAS470M10
	C701-C704, C707, C708, C721, C722, C726, C728, C918, C936, C943, C946-C948	CEAS470M16
	C712, C716, C720, C738-C740	CEAS470M25
	C705	CEAS471M16
	C733	CFTXA104J50
	C914	CFTXA105J50
	C921	CKCYB152K50
	C915, C923	CKCYB472K50
	C910, C920	CKCYB561K50
	C706, C729-C732, C950	CKDYF103Z50
	C933	CKDYX103M25
	C930, C931	CKDYX104M25
	C928	CQMA104J50
	C911, C912, C916	CQMA333J50
	C922	CQMA823J50
	C924	CQSA562J50

RESISTORS

Mark	Symbol & Description	Part No.
	VR902 Semi-fixed (10k)	VRTB6VS103
	VR901, VR903 Semi-fixed (4.7k)	VRTB6VS472
	R954	RN¼PQ1302F
	R910	RD½PMF151J
	R712, R713, R718, R719, R725, R726, R734, R735, R741, R742, R749, R750	RD¼PM181J
	R758, R759, R944, R952	RD¼PMF□□□J
	Other resistors	RD⅛PM□□□J

OTHERS

Mark	Sy
	X901 (
	Speake
	(CENTE
	Mini ja
	(MULT
	Mini DI
	(VIDEO

V/SUR.FL

SEMICONDU

Mark	Sy
	IC303,
	IC414
	IC351
	IC403
	IC402
	IC421
	IC410-
	IC418-
	IC401
	IC309
	IC301,
	IC406
	IC417,
	IC305
	Q427,
	Q424-
	Q301,
	Q434
	Q302,
	Q421,
	Q432,
	D425,
	D301,
	D427-

COILS

Mark	Sy
	L401
	L402,

CAPACITOR

Mark	Sy
	C478 (
	C349
	C461
	C347,
	C319,
	C408
	C402
	C435
	C317,
	C437,
	C475

Mark	Symbol & Description	Part No.
	C1158	CFTXA103J50
	C1101–C1104, C1128, C1129, C1145, C1146, C1148	CFTXA104J50
	C1107, C1108, C1117, C1119	CFTXA223J50
	C1147, C1161, C1162	CFTXA224J50
	C1109, C1110, C1118, C1120	CFTXA334J50
	C1178	CKDYB222K50
	C1159	CKMYB152K50
	C1114, C1116, C1121, C1123	CKMYB471K50
	C1105, C1106	CKMYB681K50
	C1175, C1176	CKMYF472Z50

RESISTORS

Mark	Symbol & Description	Part No.
	R1113, R1114, R1130–R1132, R1134, R1135, R1140, R1141, R1148–R1150, R1165–R1168, R1170, R1171, R1175–R1180, R1182, R1183, R1187, R1188, R1190, R1192, R1194, R1196, R1198, R1200, R1202, R1204–R1244	RN¼PC□□□□F
	Other resistors	RD⅛PM□□□J

S/SUPERINPOSE Assembly (AWQ1008)

SEMICONDUCTORS

Mark	Symbol & Description	Part No.
	IC701, IC702	CX–894
	IC903	MB88323A–K2
	IC703, IC704	NJM2233BS
	IC904, IC905	TC4066BP
	IC902	UPC1377C
	IC901	UPC78M12H
	Q713	RN1203
	Q916	RN2203
	Q701, Q703, Q705, Q707, Q709, Q711, Q902	2SA1048
	Q702, Q704, Q706, Q708, Q710, Q712, Q901, Q903–Q911, Q914, Q915	2SC2458
	D901	RD5.6ESB2
	D907	RD6.2ESB2
	D701–D706, D902–D906, D908	1SS252

RELAY

Mark	Symbol & Description	Part No.
	RY701 Relay	ASR1005

COILS

Mark	Symbol & Description	Part No.
	L702 AF choke coil	ATH1011
	L901, L904, L905, L907 Inductor	LAU101K
	L903 Inductor	LAU180K
	L902 Inductor	LAU181K

CAPACITORS

Mark	Symbol & Description	Part No.
	TC901	ACM–020
	C906	CCCSL151J50
	C949	CCCSL180J50
	C938, C939	CCCSL220J50
	C908	CCCSL221J50
	C907, C937	CCCSL330J50
	C927, C940, C941	CCCSL470J50
	C734–C737	CCMSL270J50
	C709, C711	CCMSL470J50
	C901, C909, C913, C919, C929	CEAS010M50
	C902–C904, C934	CEAS100M25
	C723	CEAS100M50
	C932	CEAS101M10
	C926	CEAS101M16
	C710, C714, C718	CEAS102M6
	C925	CEAS2R2M50
	C905	CEAS221M16
	C917, C942	CEAS4R7M50
	C935	CEAS470M10
	C701–C704, C707, C708, C721, C722, C726, C728, C918, C936, C943, C946–C948	CEAS470M16
	C712, C716, C720, C738–C740	CEAS470M25
	C705	CEAS471M16
	C733	CFTXA104J50
	C914	CFTXA105J50
	C921	CKCYB152K50
	C915, C923	CKCYB472K50
	C910, C920	CKCYB561K50
	C706, C729–C732, C950	CKDYF103Z50
	C933	CKDYX103M25
	C930, C931	CKDYX104M25
	C928	CQMA104J50
	C911, C912, C916	CQMA333J50
	C922	CQMA823J50
	C924	CQSA562J50

RESISTORS

Mark	Symbol & Description	Part No.
	VR902 Semi-fixed (10k)	VRTB6VS103
	VR901, VR903 Semi-fixed (4.7k)	VRTB6VS472
	R954	RN¼PQ1302F
	R910	RD½PMF151J
	R712, R713, R718, R719, R725, R726, R734, R735, R741, R742, R749, R750	RD¼PM181J
	R758, R759, R944, R952	RD¼PMF□□□J
	Other resistors	RD⅛PM□□□J

OTHERS

Mark	Symbol & Description	Part No.
	X901 Crystal resonator	ASS1017
	Speaker terminal 2P (CENTER SPEAKER)	AKE–058
	Mini jack (MULTI–ROOM REMOTE)	AKN1020
	Mini DIN socket 4P (VIDEO OUT, VDP, VCR1, VCR2)	AKP1016

V/SUR.FL Assembly (AWZ2441)

SEMICONDUCTORS

Mark	Symbol & Description	Part No.
	IC303, IC308	CX–894
	IC414	LA2730
	IC351	LC7570
	IC403	LM3364K–15
	IC402	M50199P
	IC421	M5201P
	IC410–IC413, IC415, IC418–IC420, IC423	M5218L
	IC401	M5233P
	IC309	NJM2233BS
	IC301, IC302, IC304, IC307	NJM2235S
	IC406	TC4066BP
	IC417, IC422	TC9154AP
	IC305	UPC78L05
	Q427, Q441	RN1203
	Q424–Q426, Q437, Q440	RN2203
	Q301, Q305, Q307, Q309, Q311, Q434	2SA1048
	Q302, Q306, Q308, Q310, Q312, Q421, Q422, Q428, Q438, Q439	2SC2458
	Q432, Q433, Q435, Q436, Q442	2SC2878
	D425, D426	RD5.1ESB2
	D301, D302, D401, D421–D424, D427–D433, D436, D438, D439	1SS252

COILS

Mark	Symbol & Description	Part No.
	L401 Inductor	LAU101K
	L402, L403 Inductor	LTA822J

CAPACITORS

Mark	Symbol & Description	Part No.
	C478 (0.047 μF)	ACH1070
	C349	CCMSL100D50
	C461	CCMSL220J50
	C347, C348	CCMSL270J50
	C319, C326, C455	CCMSL470J50
	C408	CEANP100M16
	C402	CEANP4R7M35
	C435	CEASR33M50
	C317, C325, C424–C426, C434, C437, C438, C457	CEAS010M50
	C475	CEAS100M25
	C323, C324, C421, C422, C427	CEAS100M50
	C418, C429, C443, C446	CEAS101M10
	C440, C441	CEAS101M16
	C330	CEAS102M10
	C320, C327, C332, C334	CEAS102M6
	C451–C454, C470, C473	CEAS2R2M50
	C430, C467	CEAS220M16
	C447–C450, C466, C468, C469, C471, C472, C474, C476	CEAS4R7M50
	C301–C314, C316, C321, C322, C336, C337, C341,C345, C350, C403, C415	CEAS470M16
	C417	CEAS471M10
	C315, C318	CEAS471M16
	C401	CFTXA103J50
	C404, C407, C433	CFTXA104J50
	C459, C460	CFTXA183J50
	C432, C439	CFTXA333J50
	C413, C414	CFTXA823J50
	C411, C416, C419	CKCYB103K50
	C339, C340, C344, C420	CKCYF103Z50
	C490	CKCYX473M25
	C346	CKDYF103Z50
	C436	CKMYB471K50
	C431, C480–C482	CQMA472K50
	C405, C410	CQMA561J50
	C406, C409, C458	CQMA562K50
	C423, C428	CQMA682K50

RESISTORS

Mark	Symbol & Description	Part No.
	VR422 Semi-fixed (22K)	VRTB6VS223
	VR421 (100k)	ACS1020
	R904	RD½PMF2R7J
	R322, R324, R330, R335, R342, R343, R348, R349, R355, R356	RD¼PM□□□J
	Other resistors	RD⅛PM□□□J

OTHERS

Mark	Symbol & Description	Part No.
	X401 Ceramic resonator	ASS1016
	Pin jack 1P (VDP IN)	AKB1010
	Pin jack 4P (FRONT PRE OUT/POWER IN)	AKB1033
	Pin jack 3P (VCR1–VCR3 IN/OUT)	AKB1050
	Pin jack 6P (VIDEO ADAPTOR OUT/IN, TO MONITOR TV 1/2, VIDEO1/TV IN)	AKB1058
	Pin jack 3P (CENTER/REAR PRE OUT/POWER IN)	AKB1061
	Mini jack 2P (CONTROL IN/OUT)	AKN1006
	DIN socket 5P (VIDEO OUT TO RF MODULATOR)	AKP–081

FRONT CONTROL Assembly (AWZ2442)

SEMICONDUCTORS

Mark	Symbol & Description	Part No.
	IC801	PDG032-C
	IC802	PD0012A
	Q801, Q802, Q804, Q810-Q812	RN1203
	Q813	RN2203
	Q803, Q805	2SC2458
	D805-D812	AEL1072
	D801-D804	AEL1092
	D818-D825	RD5.6ESB
	D813-D817, D826-D829, D831, D833	1SS252

SWITCHES

Mark	Symbol & Description	Part No.
	S817, S819, S820 Tact switsh (SIMULATED STEREO, REC SEL SOURCE, VCR1 REC SEL)	ASG-711
	S801-S813, S815, S816, S821, S826-S856 Tact switch (POWER, SPEAKERS A/B, REAR /CENTER, SLEEP, CENTER MONO OUT, ACOUSTIC MEMORY/ SELECT, TREBLE -/+, BASS -/+, VCR MONO, VCR NOISE FILTER, VIDEO SELECTOR, BALANCE L/R, MUTING, SOUND FIELD MEMORY MEMORY/ SELECT, CENTER LEVEL -/+, REAR LEVEL -/+, DELAY TIME, OFF, STUDIO, STADIUM, SIMULATED SURROUND, DOLBY SURROUND PRO LOGIC, CENTER MODE, TEST TONE, VCR1, VCR2, VCR3, VDP, TV, VIDEO1, VIDEO2, TAPE1/DAT1, TAPE2/DAT2 MONITOR, LINE, CD, TUNER, PHONO, VIDEO ADAPTOR)	ASG1029

CAPACITORS

Mark	Symbol & Description	Part No.
	C804, C805, C851, C852	CCMSL101J50
	C802	CEAS010M50
	C855	CEAS101M10
	C858	CEAS470M50
	C803	CEJA0R1M50
	C806	CEJA100M50
	C856, C857	CKCYF103Z50
	C801, C807, C808	CKDYF103Z50

RESISTORS

Mark	Symbol & Description	Part No.
	R881, R882	RA8S823J
	Other resistors	RD 1/8 PM□□□J

OTHERS

Mark	Symbol & Description	Part No.
	X801 Ceramic resonator	ASS1004
	Pin jack 1P	AKB1082
	Remote control unit	AXX1010
	V801 Fluorescent indicator	AAV1075

REAR·CENTER AMP Assembly(AWZ2443)

SEMICONDUCTORS

Mark	Symbol & Description	Part No.
⚠	IC601-IC603	UPC1270H
	Q601-Q603	2SC2458

CAPACITORS

Mark	Symbol & Description	Part No.
	C607, C608, C621	CCMSL270J50
	C615, C616	CEAS010M50
	C624	CEAS100M50
	C605, C606	CEAS101M10
	C601, C626	CEAS2R2M50
	C625	CEHAQ101M10
	C602	CEHAQ2R2M50
	C609, C610	CEHAQ100M50
	C631	CEHAQ100M2A
	C611, C612, C627	CFTXA333J50
	C630	CKCYB103K50
	C617, C618	CKCYB471K50
	C603, C604, C628	CQMA472K50

RESISTORS

Mark	Symbol & Description	Part No.
	R619, R620, R631	ACN-131
	Other resistors	RD 1/8 PM□□□J

AF Assembly (AWZ2444)

SEMICONDUCTORS

Mark	Symbol & Description	Part No.
	IC153	M5201P
	IC151, IC152	M5218LF
	IC165	M5220L
	IC51	M5220P
	IC104	NJM4558DXP
	IC503, IC504	NJM78M56FA
	IC201, IC202	PA0016
	IC167	TC9154AP
	IC103	TC9162N
	IC105	TC9163N
	IC101, IC102	TC9164N
	IC168	TC9184P
	IC502	UPC78M12H
	IC501	UPC7812H
	IC505	UPC79M12H

Mark	Symbol & Description	Part No.
	Q151, 501, Q508, Q509, Q511	RN1201
	Q512	2SA1048
	Q207, Q208	2SA1145
	Q213, Q214	2SA1306
	Q201, Q202	2SA979
	Q205, Q206, Q215, Q216	2SC2240
	Q101, Q102, Q502, Q503, Q505, Q506, Q513	2SC2458
	Q209, Q210	2SC2705
	Q211, Q212	2SC3298
	Q507	2SC3377
	D514	D5SB20F
	D222	RD24EB
	D512	RD4.7ESB
	D165, D166	RD5.1ESB2
	D526	RD5.6ESB
	D527	RD5.6ESB2
	D201–D218, D504, D505, D507, D515, D516, D521–D525, D528, D529, D531, D532	1SS252
	D508–D511, D517	11E2
	D513	4D4B44

RELAYS

Mark	Symbol & Description	Part No.
	RY503, RY504 Relay	ASR–112
	RY501 Relay	ASR–512
	RY502, RY505 Relay	ASR1005

COLIS

Mark	Symbol & Description	Part No.
	L201, L202 AF choke coil	ATH1004
	L601, L602 AF choke coil	ATH1011

TRANSFORMER

Mark	Symbol & Description	Part No.
	T501 Power transformer	ATT1015

CAPACITORS

Mark	Symbol & Description	Part No.
	C515–C517 (0.01 μF/125V)	ACG1003
	C503, C504 (10000 μF/71V)	ACH1010
	C505, C506 (6800 μF/50V)	ACH1126
	C229	CCCSL020C500
	C215–C217	CCCSL101K500
	C225, C226	CCCSL151J50
	C211–C214	CCCSL680J50
	C230	CCDSL020C500
	C218	CCDSL101K500
	C171, C172	CCDSL181K500
	C101–C114, C127–C134	CCMSL101J50
	C219, C220	CEANP2R2M50
	C64, C169, C170, C518, C524	CEAS010M50
	C231–C234	CEAS100M100
	C51, C52, C179, C180, C508, C512	CEAS100M25
	C528–C530	CEAS100M50
	C510	CEAS102M25
	C514	CEAS102M35
	C61, C62, C115–C118, C121, C122, C151, C152, C154, C157, C159–C162, C167, C168	CEAS2R2M50
	C201, C202, C227	CEAS220M50
	C209, C210, C502	CEAS221M10
	C513	CEAS332M25
	C153	CEAS470M16
	C617	CEAS470M50
	C55, C56, C501	CEAS471M6
	C509	CEHAQ100M25
	C521	CEHAQ100M50
	C526	CEHAQ220M50
	C507, C511	CEHAQ470M25
	C221–C224, C613, C614	CFTXA104J50
	C123, C124, C177, C178, C181, C182	CFTXA153J50
	C57, C58	CFTXA243J50
	C155	CFTXA333J50
	C59, C60, C183, C184	CFTXA823J50
	C531, C532	CKDYB102K50
	C53, C54	CKDYB331K50
	C205, C206	CKDYB471K50
	C125, C126, C173, C174, C520	CKDYF103Z50
	C519	CKDYF473Z50
	C63	CKDYX104M25
	C158	CKMYF222Z50
	C207, C208	CMA270J500
	C203, C204	CQMA152K50
	C175, C176	CQMA272J50
	C156	CQMA332J50
	C119, C120	CQMA393K50

RESISTORS

Mark	Symbol & Description	Part No.
	R259, R260	ACN1018
	R269–R272	RS1LMF100J
	R506	RS1PMF2R2J
	R277	RS2LMF222J
	R541, R542	RS2LMF331J
	R505	RS2LMF680J
	R217, R218	RDR½PM123J
	R201–R204	RDR¼PM□□□J
	R543, R544, R551	RD½PMF□□□J
	R211–R216, R239–R246, R251–R258, R261–R264, R516–R518, R546, R550, R621–R624	RD¼PMF□□□J
	R207–R210, R219–R224	RD¼PM□□□J
	R231–R234, R247–R250, R507	RFA¼PS□□□J
	Other resistors	RD⅛PM□□□J

OTHERS

Mark	Symbol & Description	Part No.
	Pin jack 4P (VCR3 IN/OUT)	AKB1007
	Pin jack 6P (TAPE2/DAT2 REC/PLAY, VIDEO1/TV/VDP IN, VCR1/VCR2 REC/PLAY)	AKB1008
	Pin jack 6P (LINE IN, TAPE1/DAT1 REC/PLAY)	AKB1024
	Pin jack 6P (PHONO/TUNER/CD IN)	AKB1091
	Speaker terminal 4P (REAR SPEAKERS R/L)	AKE1007
	Speaker terminal 8P (FRONT SPEAKERS)	AKE1011

VOL IND Assembly

SEMICONDUCTORS

Mark	Symbol & Description	Part No.
	D830	AEL1053

TERMINAL Assembly

There is no supply parts in this unit.

HEADPHONE Assembly

OTHERS

Mark	Symbol & Description	Part No.
	Headphone jack (PHONES)	AKN1002

MOTOR–VOL Assembly

SEMICONDUCTORS

Mark	Symbol & Description	Part No.
	IC154	M5220L
	IC671	TA7291S

FILTER

Mark	Symbol & Description	Part No.
	F671 EMI filter	ATF1010

CAPACITORS

Mark	Symbol & Description	Part No.
	C675	CEJA100M50
	C163, C164	CKDYF103Z50
	C165, C166	CKMYB331K50

RESISTORS

Mark	Symbol & Description	Part No.
	VR671	ACX1022
	Other resistors	RD 1/8 PM□□□J

6. ADJUSTMENTS

6.1 V/SUR · FL ASSEMBLY SECTION

- Set the MUSTER VOLUME to the minimum.
- Set the INPUT BALANCE volume (VR421) on the rear panel to the center click point.
  Input sine wave signal of 1kHz, 260mV to the LINE input. Lch (or Rch) only.
- Set the function switches to the LINE.
  Set the SURROUND MODE switches to the STADIUM.

1) Dolby Level Adjustment

- Adjust with VR422 so that the output of the DOLBY TP of the V/SUR · FL assembly becomes 100mV±5mV.

6.2 S/SUPERIMPOSE ASSEMBLY SECTION

1) Adjusting H. SYNC and V. SYNC for Superimposed Display.

- Adjust the VR901 so that the application of power without any signal causes the S/SUPERIMPOSE assembly's TP (H. sync) to show a frequency of 15.75kHz±50Hz.
- Adjust the VR902 so that the application of power without any signal causes the S/SUPERIMPOSE assembly's TP (V. sync) to show a frequency of 53Hz±1Hz.

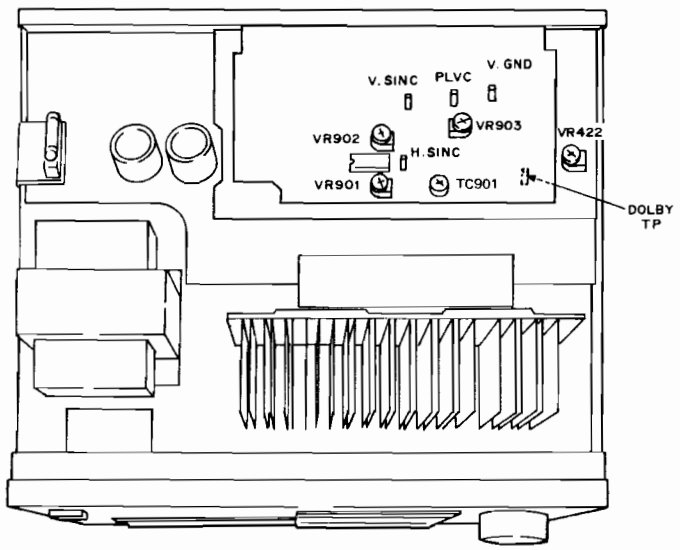

Fig.1 Adjustment points

2) PLVL Adjustment

- Adjust the VR903 so that the application of power without any signal causes the S/SUPERIMPOSE assembly's TP (PLVL) to show a DC voltage of 2.5V±0.05V

Note :
In case PC voltage for TP (PLVL) deviates, the brightness of background color when there is no video signal input changes.

- When the voltage is high ····· bright
- When the voltage is low ····· dim

3) Adjusting the Superimposed Display in the Center

- Connect the VIDEO OUT (TO MONITOR TV) terminal to a monitor TV.
- Press the BALANCE key or TONE key (TREBLE or BASS).Then adjust the TC901 to center the superimposed display output through the VIDEO OUT (TO MONITOR TV) terminal, leaving equal margin on both right and left of the TV screen.

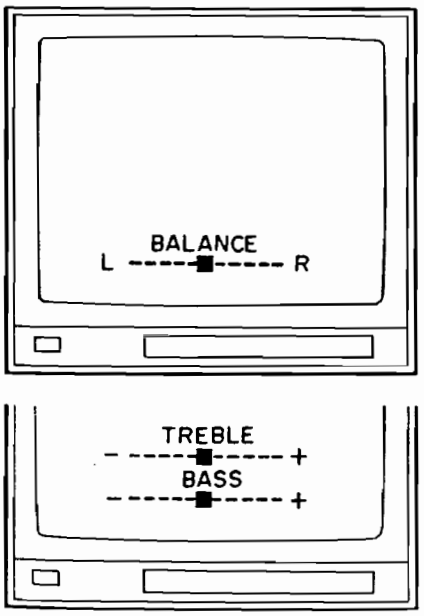

Fig.2

7. IC INFORMATION

• PDG032-C (μ-COM)

Pin No.	Name	I/O	Function	Active
1 | 16	S_0 | S_{15}	O	Segment control output of FL display	H
17 | 28	G_{11} | G_0	O	Grid control output of FL display	H
29	INT	I	Connect to ground.	——
30	XTAL	–	4.19 MHz ceramic resonator connecting pin	——
31	EXTAL	I		——
32	$\overline{RET}$	I	RESET input	L
33	NC	–	Not used (OPEN)	——
34	V_{DD}	–	+5V power applying pin	——
35 | 38	PORT I 0 | PORT I 3	O	Key matrix output	H
39 | 42	PORT B0 | PORT B3			
43	NC	–	Not used (OPEN)	——
44	CLOCK	O	Serial data output for control	H
45	DATA	O		H
46	CD DIRECT	I	Connect to ground	H
47	PORT A0	I	Detection of video signal existence When the video signal is not input, output the video signal (blue) to video out terminal. (Gray when using S terminal) L·····Exist H·····Not exist	L
48	PORT A1	I	Not used (OPEN)	——
49	VOL. DOWN	O	Motor driver control output for master volume	H
50	VOL. UP			
51	PORT F0	I	TYPE selecting (Be sure to set "H") : J (L) /EX (H)	——

	Pin 49	Pin 50
VOL. UP	H	L
VOL. DOWN	L	H
NORMAL	H	H

Pin No.	Name	I/O	Function		Active
52 | 54	PORT F1 | PORT F3	I	Key matrix input		L
55 | 58	PORT E0 | PORT E3				
59	PORT Y0	O	Strobe output for IC1130 (CXD1067P) of PRO-LOGIC circuit		H
60	PORT Y1	O	Chip enable output for IC802 (PD0012A) of Led Drive		L
61	WP	I	AC (50 Hz/60 Hz) input Back up state when there is no input		H
62	RMC	I	Remote control signal input		L
63	PORT D2	O	Strobe output for IC101 (TC9164N) of audio function		H
64	PORT D3	O	Strobe output for tone control IC168 (TC9184P) and front balance IC167 (TC9154AP)		H
65	PORT D4	O	Strobe output for IC102 (TC9164N), IC103 (TC9162N) and IC105 (TC9163N) of audio function		H
66	PORT D5	O	Strobe output for control IC351 (LC7570) of VIDEO, S terminal and surround		H
67	PORT D6	O	Strobe output for volume and balance control IC417 (TC9154AP) of rear		H
68	PORT D7	O	Strobe output for volume control IC422 (TC9154AP) of center		H
69	PORT D8	O	Chip enable output for IC903 (MB88323A-K2) of superimposing circuit		L
70	POWER. RY	O	Control output of power relay (RY501) driving transistor (Q501) ("H" : Power relay ON)		H
71	Vss	I	Connect to ground		
72	TX	O	Not used	(OPEN)	—
73	NC	–			—
74	TEX	I		(Be sure to connect to V_{DD} to pull up)	—
75	V_{REF}	–			—
76	V_{FDP}	I	-33V power applying pin for FL display control		—
77	SP-A	O	Control output of transistor (Q508) for speaker-A output relay (RY503) drive ("H" : Relay ON)		H
78	SP-B	O	Control output of transistor (Q509) for speaker-B output relays (RY504) drive ("H" : Relay ON)		H
79	SP-R	O	Control output of transistor (Q511) for rear speaker output relay (RY505) drive ("H" : Relay ON)		H
80	SP-C	O	Control output of transistor (Q713) for front center speaker output relay (RY701) drive ("H" : Relay ON)		H

8. PROGRAMABLE REMOTE CONTROL UNIT (AXD1085)

8.1 EXPLODED VIEW AND PARTS LIST

NOTES :
- Parts without part number cannot be supplied.
- The ⚠ mark found on some component parts indicates the impotance of the safety factor of the part. Therefore, when replacing, be sure to use parts of identical designation.
- Parts marked by "⊙" are not always kept in stock. Their delivery time may be longer than usual or they may be unavailable.

Parts List

Mark	No.	Part No.	Description
	1	AZH1033	Case (A)
	2	AZH1034	Case (B)
	3	AZH1035	Case (C)
	4	AZN1400	Filter
	5	AZA1181	Rubber switch
	6	AZS1042	Knob
	7	AZA1180	Name plate
	8	AZB1124	Screw
	9	AZN1401	Leg
	10	AZB1274	Electrode spring
	11	AZB1275	Electrode spring
	12	AZB1276	Electrode spring
	13	AZB1277	Electrode spring
	14	AAK1671	Sheet (TV)
	15	AAK1672	Sheet (VDP)
	50		Label

* When replacing the case No.2 (B) (AZH1034) by a new one, remove all electrode springs and install them into the new case (B).

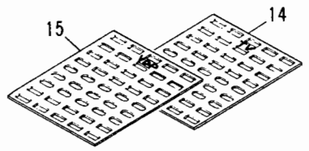

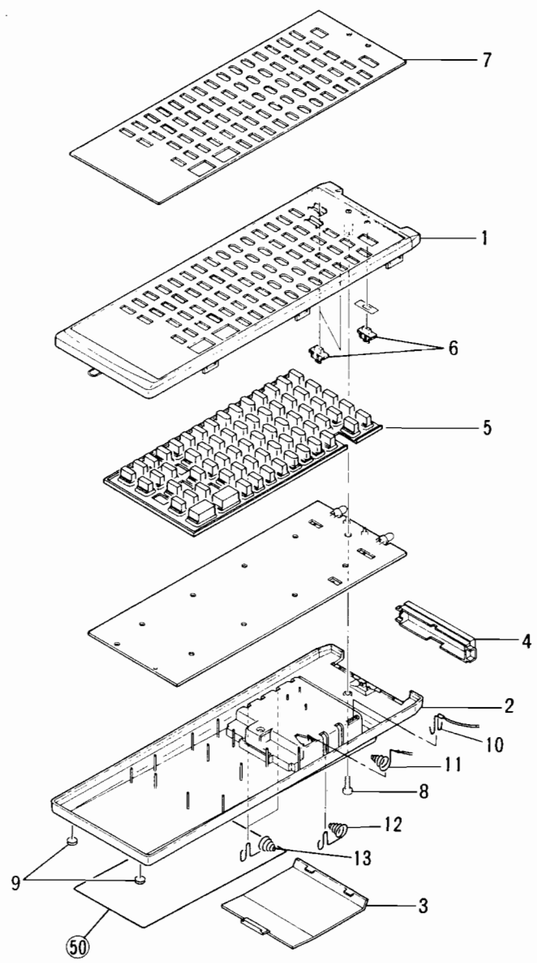

8.2 ELECTRICAL PARTS LIST

NOTES :
- Parts without part number cannot be supplied.
- Parts marked by "⊙" are not always kept in stock. Their delivery time may be longer than usual or they may be unavailable.
- The ⚠ mark found on some component parts indicates the impotance of the safety factor of the part. Therefore, when replacing, be sure to use parts of identical designation.
- When ordering resistors, first convert resistance values into code form as shown in the following examples.

Ex.1 When there are 2 effective digits (any digit apart from 0), such as 560 ohm and 47k ohm (tolerance is shown by J=5%, and K=10%).

560 Ω	56×10^{1}	561	RD1/4PS 5 6 1 J
47k Ω	47×10^{3}	473	RD1/4PS 4 7 3 J
0.5 Ω	0R5		RN2H 0 R 5 K
1 Ω	010		RS1P 0 1 0 K

Ex.2 When there are 3 effective digits (such as in high precision metal film resistors).

5.62k Ω	562×10^{1}	5621	RN1/4SR 5 6 2 1 F

SEMICONDUCTORS

Mark	Symbol & Description	Part No.
	IC01	PD5108
	IC02	AZC1045
	IC03	AZC1046
	IC04	AZC1047
	IC05	AZC1048
	Q01, Q02	AZC1050
	Q03, Q04	AZC1051
	Q05	AZC1052
	D01, D02, D07−D15	AZC1233
	D03−D06	AZC1049
	PHD01	AZC1055
	LED01, LED02	AZC1054
	IED01, IED02	AZC1053

SWITCH

Mark	Symbol & Description	Part No.
	S01, S02 Slide switch (AUDIO/VIDEO/AUX)	AZC1079
	S05 Slide switch (USE/LEARN, DAT/TAPE)	AZC1080
	S04 Tact switch (RESET)	AZC1081

CAPACITORS

Mark	Symbol & Description	Part No.
	C01 (220P)	AZC1058
	C02 (33P)	AZC1059
	C03, C04 (0.001 μF)	AZC1062
	C05, C06 (20P)	AZC1060
	C07 Electrolytic capacitor (4.7/6V)	AZC1252
	C08 (0.01)	AZC1061
	C09 Electrolytic capacitor (1000/6V)	AZC1255
	C10 Electrolytic capacitor (100/6V)	AZC1251
	C11 (0.01)	AZC1063

RESISTORS

Mark	Symbol & Description	Part No.
	R01 (8.2K)	AZC1064
	R02 (4.7K)	AZC1065
	R03, R08 (33K)	AZC1066
	R04 (560K)	AZC1067
	R05, R17 (10K)	AZC1068
	R06 (82K)	AZC1069
	R07, R11, R30−R38 (100K)	AZC1073
	R09 (6.8K)	AZC1070
	R10 (56K)	AZC1071
	R12 (1M)	AZC1072
	R13, R16 (680Ω)	AZC1075
	R14 (3.9Ω)	AZC1078
	R15 (10Ω)	AZC1076
	R18, R22−R29 (47K)	AZC1077
	R19−R21 (2.2K)	AZC1074

OTHERS

Mark	Symbol & Description	Part No.
	X1 Resonator (8MHz)	AZC1057

8.3 SCHEMATIC DIAGRAM

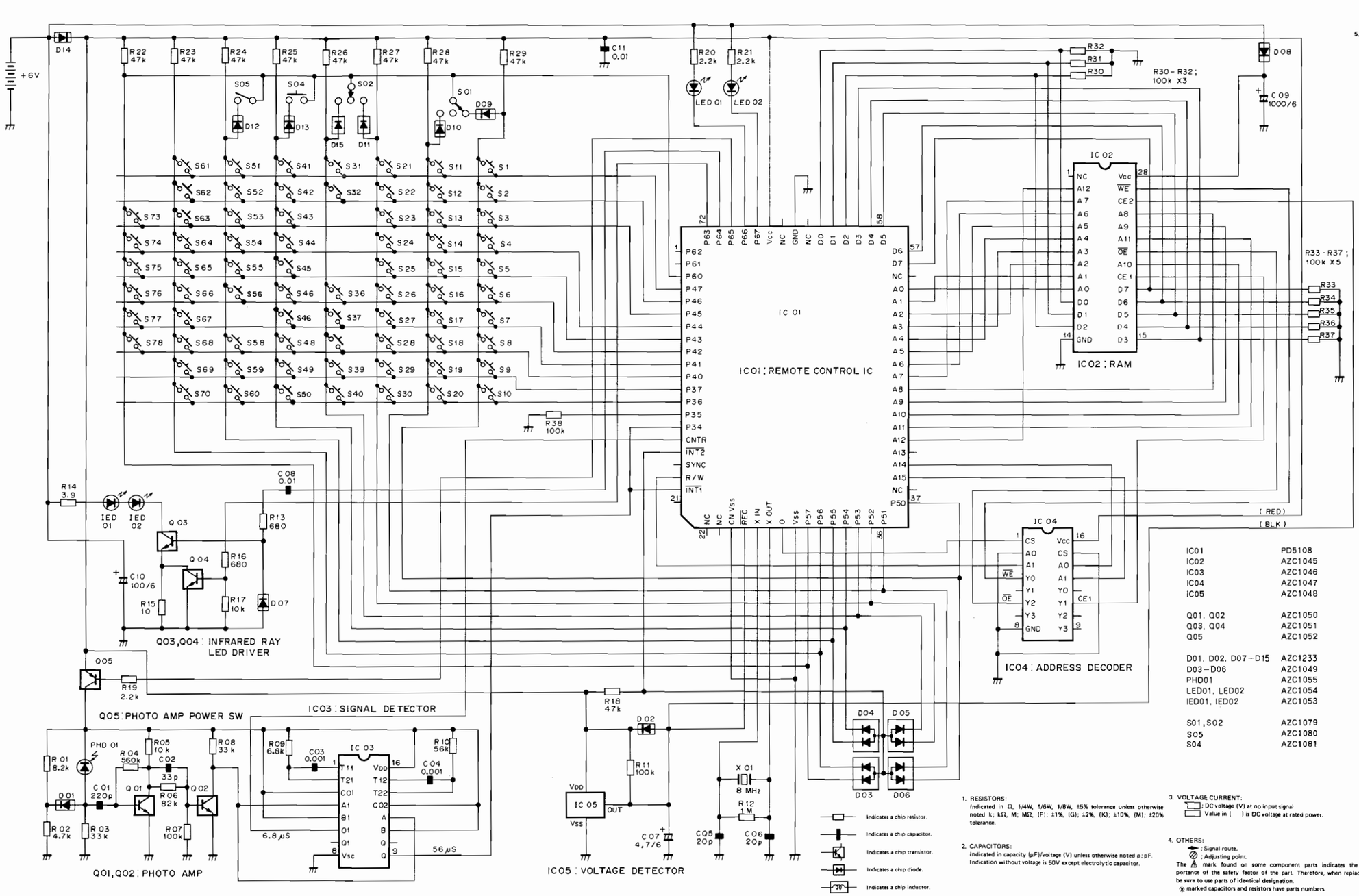

IC01	PD5108
IC02	AZC1045
IC03	AZC1046
IC04	AZC1047
IC05	AZC1048
Q01, Q02	AZC1050
Q03, Q04	AZC1051
Q05	AZC1052
D01, D02, D07 - D15	AZC1233
D03 - D06	AZC1049
PHD01	AZC1055
LED01, LED02	AZC1054
IED01, IED02	AZC1053
S01, S02	AZC1079
S05	AZC1080
S04	AZC1081

1. RESISTORS:
Indicated in Ω, 1/4W, 1/6W, 1/8W, ±5% tolerance unless otherwise noted k; kΩ, M; MΩ, (F); ±1%, (G); ±2%, (K); ±10%, (M); ±20% tolerance.

2. CAPACITORS:
Indicated in capacity (μF)/voltage (V) unless otherwise noted p; pF.
Indication without voltage is 50V except electrolytic capacitor.

3. VOLTAGE CURRENT:
; DC voltage (V) at no input signal
; Value in ( ) is DC voltage at rated power.

4. OTHERS:
; Signal route.
; Adjusting point.
The ⚠ mark found on some component parts indicates the importance of the safety factor of the part. Therefore, when replacing, be sure to use parts of identical designation.
※ marked capacitors and resistors have parts numbers.

5. SWITCHES (Underline indicates switch position)

S01 : AUDIO/VIDEO/AUX
S02 : SR RECALL/USE/LEARN
S04 : RESET
S05 : DECK I/DECK II

TAPE/VCR
S-1 : VCR POWER
S-2 : ● TAPE/VCR
S-3 : ▮▮ TAPE/VCR
S-4 : ○/VCR CH−
S-5 : VCR CH+
S-6 : ◀◀
S-7 : ◀/ANT
S-8 : ■
S-9 : ▶
S-10 : ▶▶

CD/VDP
SS-11 : DICSEL/DISPLAY
SS-12 : ▮▮
S-13 : ⏮
S-14 : ⏭
S-15 : PGM
S-16 : ◀◀
S-17 : ■
S-18 : ▶
S-19 : ▶▶

TUNER/CD/TV/VDP
S-20 : 1/13
S-21 : 2/14
S-22 : 3/15
S-23 : 4/16
S-24 : 5/17
S-25 : 6/18
S-26 : 7/19
S-27 : 8/20
S-28 : 9/21
S-29 : 0, 10/22
S-30 : 11/MEMORY/23
S-31 : 12/CLEAR/24

TUNER/CD/PHONO/AMP/TV
S-32 : BAND/DUAL
S-36 : 1·12/13·24/CH−RETURN
S-37 : FREQUENCY−/TV CHANNEL−
S-38 : FREQUENCY+/TV CHANNEL+
S-39 : TV POWER
S-40 : CD+10/TV FUNC
S-41 : PHONO■/TV VOL−
S-42 : PHONO▶/TV VOL+
S-43 : AMP
S-44 : VCR 1
S-45 : VCR 2
S-46 : VCR 3
S-47 : VDP
S-48 : TV
S-49 : VIDEO 1
S-50 : VIDEO 2
S-51 : TAPE 1/DAT 1
S-52 : TAPE 2/DAT 2
S-53 : LINE
S-54 : CD
S-55 : TUNER
S-56 : PHONO
S-58 : SLEEP
S-59 : AMP POWER
S-60 : MUTING
S-61 : FRONT R
S-62 : FRONT L
S-63 : MASTER VOLUME−
S-64 : MASTER VOLUME+
S-65 : REAR LEVEL−
S-66 : REAR LEVEL+
S-67 : SURROUND MODE
S-68 : DELAY TIME
S-69 : REAR R
S-70 : REAR L
S-73 : CENTER LEVEL−
S-74 : CENTER LEVEL+
S-75 : SOUND FIELD
S-76 : ACOUSTIC
S-77 : SP−A
S-78 : SP−B

8.4 P.C. BOARD PATTERNS

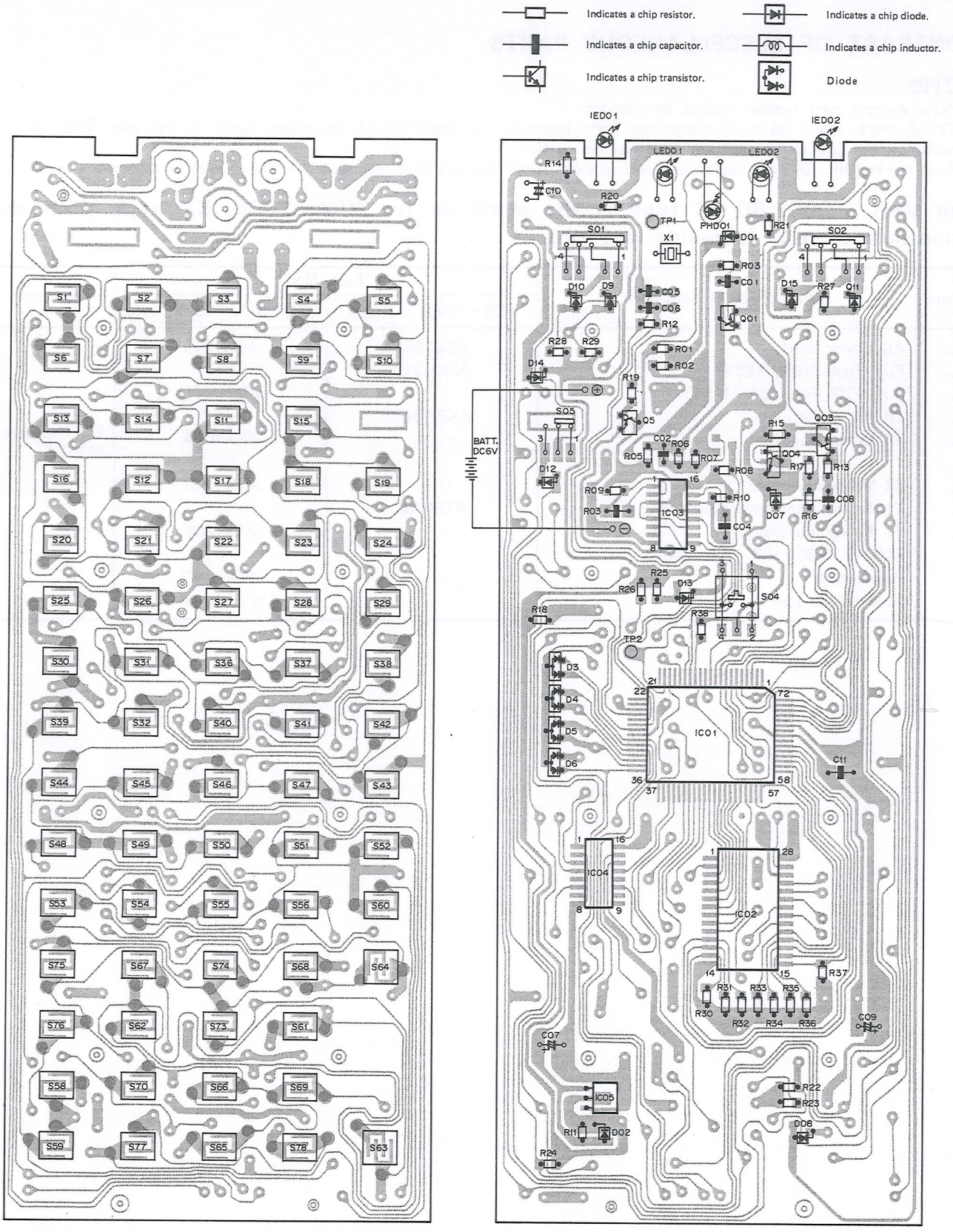

9. FOR SD/G TYPE

CONTRAST OF MISCELLANEOUS PARTS

NOTES :

- Parts without part number cannot be supplied.
- The ⚠ mark found on some component parts indicates the impotance of the safety factor of the part. Therefore, when replacing, be sure to use parts of identical designation.
- Parts marked by "⊙" are not always kept in stock. Their delivery time may be longer than usual or they may be unavailable.

The VSA−1000/SD/G type is the same as the VSA−1000/KU type with the exception of the following sections.

Mark	Symbol & Description	Part No.		Remarks
		VSA−1000/KU type	VSA−1000/SD/G type	
⚠	AC power cord	ADG1031	ADG1015	
⚠	FU1 Fuse (10A/125V)	AEK−310	.....	
⚠	FU1, FU2 Fuse (6A/125V)	.....	AEK−109	
⚠	1P AC outlet	AKP−507	.....	
⚠	S2 Voltage selector	.....	AKX1004	For impedance selector
⚠	S3 Voltage selector	.....	AKX−507	
⚠	T1 Power transformer (AC120V)	ATS1202	.....	
⚠	T1 Power transformer (AC110/120−127/220/240V)	.....	ATS1203	
	Fuse holder	.....	AKR−032	
	Fuse holder stay	.....	Non supply	

10. SURROUND EFFECT

This unit has a built in surround processor for adding presence and an expansive effect to the sound.

• STUDIO

Select this position to enjoy the effect of listening to music in a recording studio.
The source sound is output as is through the front speakers, with reverberation output through the rear speakers.
The center sound is positioned right between the front speakers. This is particularly suitable for a sound source that has a lot of reverberation.

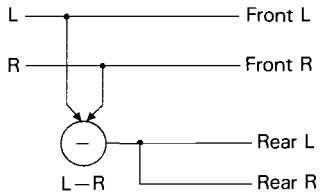

• STADIUM:

Select this position when watching sports programs such as baseball games, football games etc., for a stadium-like effect.
This position is perfect for an even more expansive effect than that produced by STUDIO.

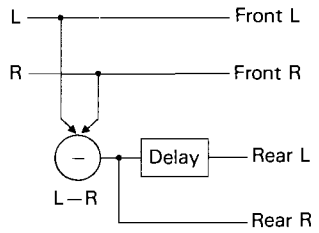

• SIMULATED SURROUND:

Use this mode for monaural sources. You will obtain an expansive sound, with outstanding presence.
Can also be used with stereo sources.

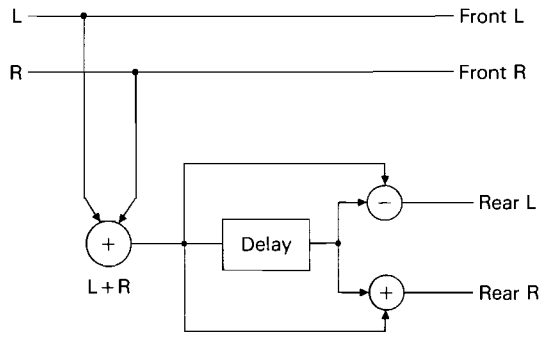

NOTE:
Only SIMULATED SURROUND operates with a monaural source. In other modes, no sound will be output from the rear speakers.

• DOLBY PRO LOGIC SURROUND

Choose this setting for movies and music (especially Video Discs and video tapes bearing the DOLBY SURROUND mark) playback.
DOLBY PRO LOGIC SURROUND continuously detects the size and direction of the dominant signal and cancels undesirable crosstalk, thereby providing signal emphasis. This results in more effective channel separation for a more powerful surround effect.
When using DOLBY PRO LOGIC SURROUND, a delay time setting of 20 ms is commonly used. Use a different setting if you prefer.

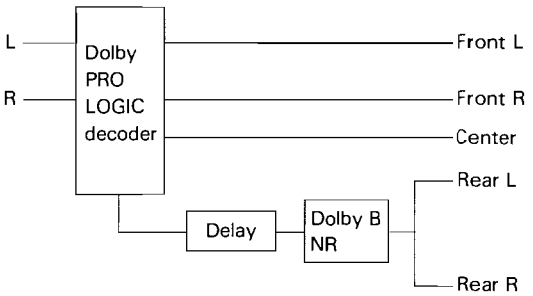

DOLBY PRO LOGIC SURROUND is equipped with the following 3 positions for the CENTER MODE. There is also an OFF position for INPUT BALANCE ADJUSTMENT.

• OFF

Be sure to set to this position when adjusting input balance (Adjustment is impossible in any other position.)

When using a center speaker:

• NORMAL

Low range frequencies, which have little effect on directionality and positioning, are routed to the left and right front speakers. So you can use a relatively small size speaker as the center speaker.

• WIDE

If you use a large size center speaker, choose this setting. The full frequency range of the PRO LOGIC center speaker, from low to high, is routed to the center speaker.

When not using a center speaker:

• PHANTOM

The signal which would have been sent to the center speaker is divided equally between the left and right front speakers.

Manufactured under license from Dolby Laboratories Licensing Corporation. Additionally licensed under one or more of the following patents: U.S. numbers 3,632,886, 3,746,792 and 3,959,590; CANADA numbers 1,004,603 and 1,037,877. "Dolby" and the double-D symbol are trademarks of Dolby Laboratories Licensing Corporation.

Manufacturé sous licence de Dolby Laboratories Licensing Corporation. En outre, sous license d'un ou plusiers des brevets suivants: numéros américains 3,632,886, 3,746,792 et 3,959,590; numéros canadiens 1,004,603 et 1,037,877. Le terme "Dolby" et le symbole Double-D sont des marques dépsoées de Dolby Laboratories Licensing Corporation.

SURROUND SPEAKER INSTALLATION EXAMPLE

To get the best effect out of the surround system, place the speakers as shown below.

A typical surround speaker arrangement

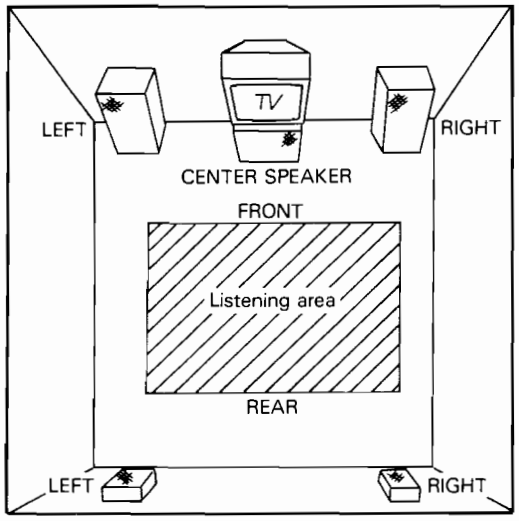

When DOLBY PRO LOGIC SURROUND is used without a center speaker, set the CENTER MODE switch to the PHANTOM position. With DOLBY PRO LOGIC SURROUND, monaural source sound will be heard only from the center channel at settings other than the PHANTOM position.

NOTE:

- *To avoid interference with the picture on a nearby TV set, use magnetically shielded speaker systems. This is particularly important for the center speaker since it is usually located closest to the TV.*
- *Position the left and right channel speakers at equal distances from the TV set.*
- *Position the center speaker above, below, or behind the TV set. Sound may not appear to coincide with the picture if you position it next to the TV set.*
- *Surround speakers are best positioned to set slightly above ear level.*

DOLBY SURROUND LEVEL ADJUSTMENT PROCEDURE

For correct SURROUND reproduction, be sure to perform this adjustment.

1. **Use SURROUND MODE switch to select DOLBY PRO LOGIC SURROUND.**
2. **Use SPEAKER switches to turn on front, rear and center speakers.**
3. **Adjust MASTER VOLUME to a suitable listening level.**
4. **Select a monaural source (such as AM radio) or Dialogue portions of movies.**
5. **Press BALANCE L and R switches together.**
6. **Press CENTER LEVEL + and – switches together.**
7. **Press REAR LEVEL + and – switches together.**
8. **Select the CENTER MODE switch to the OFF position.**
9. **Adjust rear panel INPUT BALANCE knob to the position that gives minimum volume from the front and rear speakers.**
10. **Select CENTER MODE (NORMAL, WIDE, PHANTOM) setting.**
11. **Turn on TEST TONE switch.**
12. **Adjust so that volume is the same from each speakers. Use BALANCE L and R switches, REAR LEVEL + and – switches, and CENTER LEVEL switches.**
13. **Turn off TEST TONE switch when finished.**
14. **Use AUDIO INPUT SELECTOR or VIDEO INPUT SELECTOR to select your desired source.**
15. **Adjust the desired sound level by the MASTER VOLUME.**

NOTE:

- *Set in the range of 12 to 15 by remote control operation from the listening/viewing position.*
- *The TEST TONE turns off if you operate the INPUT SELECTOR.*

11. FRONT PANEL FACILITIES

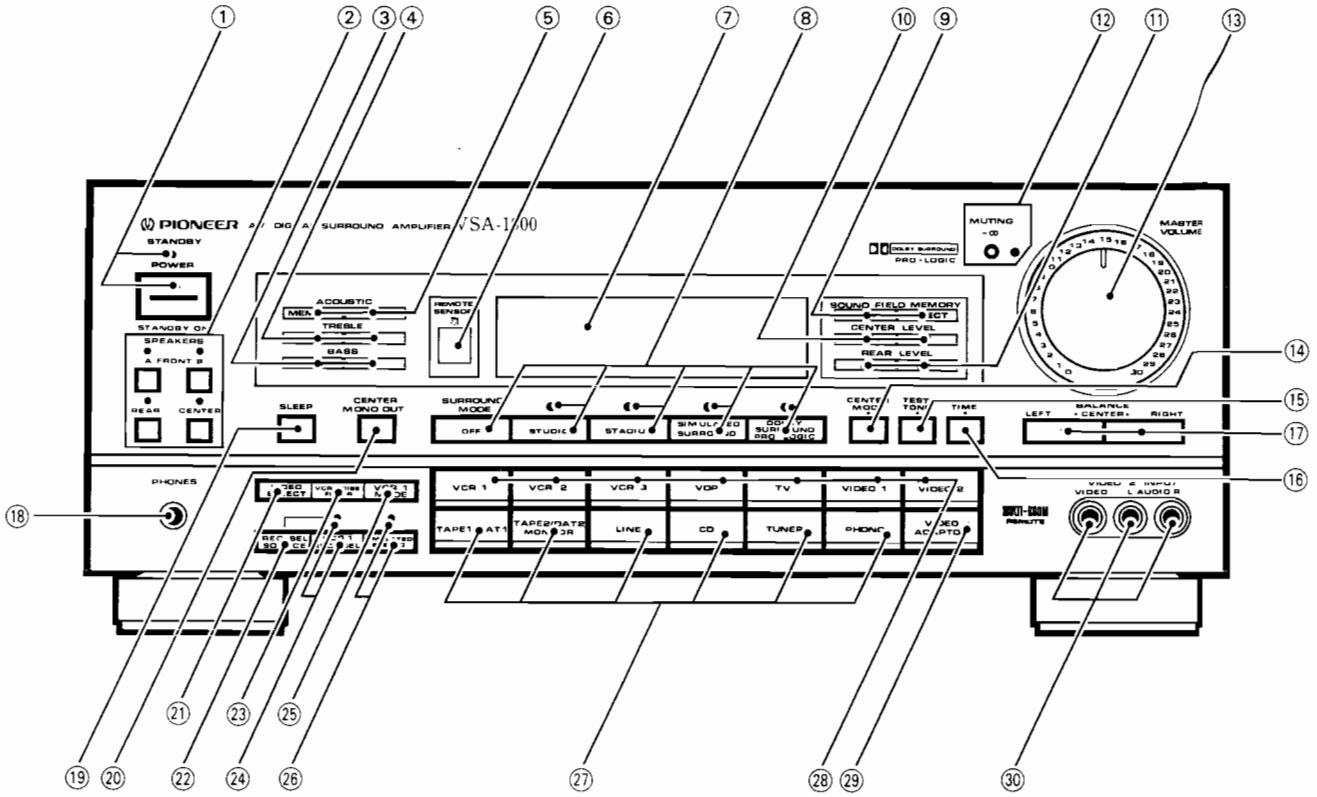

Display section

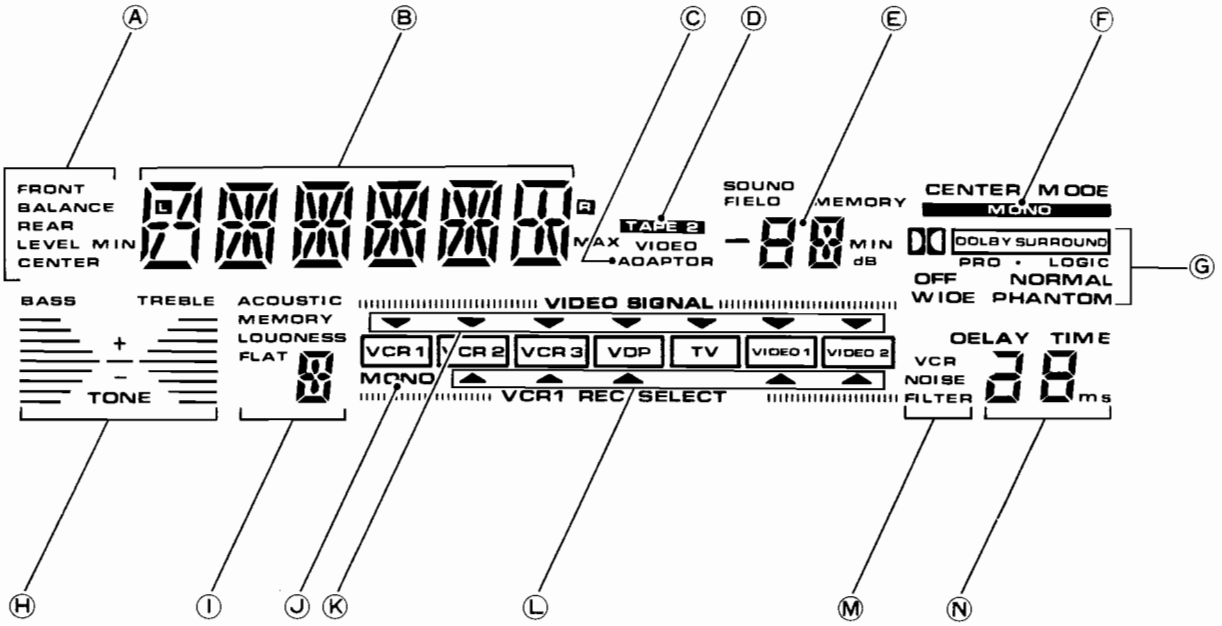

① POWER STANDBY/ON switch/indicator

- When the power cord is connected to a wall socket, the power will remain on even when the POWER switch is turned off. The unit is in the standby mode.
- The indicator lights when the unit is in the standby mode.
- The accessory remote control unit can also be used to turn the amplifier on or standby (STANDBY function).
- When not using the unit for a long period, disconnect the power cord.

② SPEAKER switches/indicators

ON/OFF switches for the speaker systems. An indicator lights when any of these switches is set to ON.

FRONT A, B:
Switches and indicates for the front speaker systems A, B.

REAR:
Switches and indicates for the rear speaker systems.

CENTER:
Switches and indicates for the front center channel speaker system.

③ BASS control switches

Use to adjust the low-frequency level. Press the + switch to increase low-frequency level, and the − switch to decrease it.
When both sides (+, −) of the BASS control are pressed simultaneously, the base response will be set to the flat (normal) condition.

④ TREBLE control switches

Use to adjust the high-frequency level. Press the + switch to increase high-frequency level, and the − switch to decrease it.
When both sides (+, −) of the TREBLE control are pressed simultaneously, the treble response will be set to the flat (normal) condition.

⑤ ACOUSTIC switches (MEMORY, SELECT)

Five types of tone (bass and treble) control settings can be preset.

MEMORY:
Press this switch to store in memory.

SELECT:
Tone setting changes as follows when pressing this switch repeatedly:

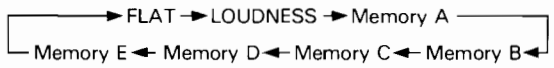

FLAT:
Flat tone characteristics.

LOUDNESS:
Low and high frequencies are emphasized. Use this setting to obtain a full-bodied sound when listening.

Presetting the acoustic memory

1. **Adjust the sound quality as desired using the BASS and TREBLE control switches.**
2. **Press the MEMORY switch.**
3. **Press the SELECT switch and select the sign to which you wish to assign the setting (A — E) while the indicator flashes.**
   - When the indicator lights after flashing, it indicates that the command has been stored in memory. If you don't select memory positions (A — E) while the ACOUSTIC indicator is flashing, nothing will be stored in memory.
   - In this way, the desired tone will be preset in one of the five acoustic memory positions. To preset four other desired tone settings, perform the same operations.
   - To recall the memorized tone settings, press the SELECT switch to select the desired memory position.

NOTE:

- *Even if the power switch is in the STANDBY position, provided the power cord is plugged into an AC wall socket, memory will not be erased. Even if the power cord is disconnected, memory will remain for about 2 weeks.*
- *If the memory is erased, program the presets once more.*

⑥ REMOTE SENSOR window

⑦ Display section

Ⓐ This lights when the front and rear balance and the rear and center volume levels are being adjusted.
During volume adjustment Ⓑ and Ⓔ display the level, and during balance adjustment Ⓑ displays the balance.
Ⓑ This gives alphanumeric display of the component selected by the INPUT SELECTOR.
When adjusting front and rear balance and volume or center volume, this displays balance and volume level.
It also gives alphanumeric display of SLEEP when the sleep timer is operating, and alphanumeric display of TEST when the DOLBY PRO LOGIC SURROUND tone is ON.
Ⓒ This lights when the VIDEO ADAPTOR switch is ON.
Ⓓ This lights when the TAPE 2/DAT 2 monitor is ON.
Ⓔ Displays the SOUND FIELD MEMORY selection.
During center or rear volume level adjustment, the volume level is displayed.
The time remaining when the SLEEP TIMER is operating is also displayed.
Ⓕ In any mode other than DOLBY PRO LOGIC SURROUND, if the CENTER MONO OUT switch is pressed, this lights.
Ⓖ Displays the DOLBY PRO LOGIC CENTER MODE.
Ⓗ Displays the TREBLE and BASS adjustment settings.
Ⓘ Displays the selected ACOUSTIC MEMORY.
Ⓙ Lights when the VCR MONO switch is ON.
Ⓚ Displays the currently selected video signal.
It also displays the video functions. If the VIDEO SELECT switch is pressed it changes.
Ⓛ Displays the component selected by the VCR 1 RECORDING SELECTOR (A component that can record to VCR 1).
Ⓜ Lights when the VCR NOISE FILTER switch is ON.
Ⓝ Displays the selected DELAY TIME.

⑧ SURROUND MODE switches/indicators

Select the source to be used when employing the SURROUND function.

OFF:
To cancel the surround function.

STUDIO:
Enjoy the atmosphere of listening to music in a recording studio.

STADIUM:
Ideal for sports broadcasts, etc.

SIMULATED SURROUND:
Gives concert-hall presence to monaural sound (AM, TV, etc.).

DOLBY PRO LOGIC SURROUND:
Select this setting when watching video tapes or video discs bearing the DOLBY SURROUND mark.

⑨ SOUND FIELD MEMORY switches (MEMORY, SELECT)

In the SOUND FIELD MEMORY:

- SURROUND MODE
- CENTER MODE (In the case of DOLBY PRO LOGIC SURROUND. In other cases the CENTER MONO OUT ON/OFF)
- FRONT balance
- CENTER volume level
- REAR balance
- DELAY TIME
- REAR volume level
- ACOUSTIC MEMORY

Up to five of these positions can be stored in memory. It is also possible to select positions previously stored in the memory ("P" is displayed)

[Contents of "P"]

- SURROUND MODE: DOLBY SURROUND
- CENTER MODE: NORMAL
- DELAY TIME: 20 ms
- FRONT, REAR balance: CENTER
- REAR, CENTER volume level: both − 14 dB
- ACOUSTIC: FLAT

HOW TO USE THE SOUND FIELD MEMORY

1. **Select ACOUSTIC MEMORY, SURROUND MODE, and adjust the DELAY TIME, balance and volume level.**
2. **Press the MEMORY switch.**
3. **While the indicator is flashing, use the SELECT switch to select the position (A − E) to be memorized.**
   - A position is memorized when the SOUND FIELD MEMORY indicator stops flashing and lights. If the position to be memorized (A − E) is not selected while the indicator is flashing, it will not be memorized.
   - TONE settings not stored in ACOUSTIC MEMORY will not be memorized.
   - One of the five possible positions has now been stored in memory. The four remaining positions can be stored in memory using the same procedure.
   - When recalling the contents of the memory, select the memorized position with the SELECT switch.
   - In "P" nothing can be memorized.

⑩ CENTER LEVEL switches

For adjustment of the center level when the SURROUND MODE is in the DOLBY PRO LOGIC SURROUND or when the CENTER MONO OUT is ON.

Press + to raise the volume, − to lower. If + and − are pressed at the same time, you will return to the initial volume level (− 14 dB).

⑪ REAR LEVEL switches

When in the SURROUND MODE, these adjust the rear level.

Press + to raise the volume, − to lower. Press + and − at the same time to return to the initial volume level (− 14 dB). This can't be performed when the SURROUND MODE is OFF.

⑫ MUTING switch/indicator

Press to temporarily cut off the sound volume. The indicator will flash. When pressed again, the sound will return to its previous level.

⑬ MASTER VOLUME control

Adjusts the volume level.

The front, rear, and center levels change at the same time.

⑭ CENTER MODE switch

Selects the DOLBY PRO LOGIC SURROUND CENTER MODE (OFF, NORMAL, WIDE, PHANTOM) setting. This can only be performed when the DOLBY PRO LOGIC SURROUND is ON.

⑮ TEST TONE switch

This only operates when DOLBY PRO LOGIC SURROUND is used. This switches the TEST TONE output ON/OFF to adjust the SURROUND BALANCE of the DOLBY PRO LOGIC SURROUND.

In the ON position the TEST TONE passes from the front left → center → front right → rear (L, R) in that order, and can be heard for approximately 2 seconds from each speaker.

⑯ DELAY TIME switch

Switches the surround delay time in three steps.

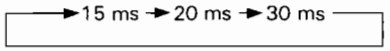

This does not operate when the SURROUND MODE is OFF or when STUDIO is used.

⑰ BALANCE switches

Use to adjust the sound volume balance between left and right speakers.

L: Press to decrease the sound on the right side.

R: Press to decrease the sound on the left side.

Press L and R together to bring the volume balance back to center.

In the surround mode, these affect the front and rear speaker volume at the same time.

⑱ PHONES jack

Connect the plug on your headphones to this jack. To listen to a program through the headphones, set all SPEAKERS switches to the OFF position.

⑲ SLEEP switch

Sets the sleep timer. Each time you press this key, the setting changes as shown here.

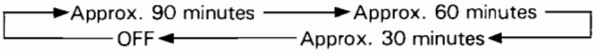

⑳ CENTER MONO OUT switch

This switches monaural (L + R) center speaker output on and off. (This switch cannot be used with DOLBY PRO LOGIC SURROUND)

NOTE:

Tone control doesn't operate with CENTER MONO OUT.

㉑ VIDEO SELECT switch

Press this to switch VIDEO OUT (TO MONITOR TV) and VCR OUT in the following sequence: (Audio doesn't change)

The recording selector has priority for VCR 1 video recording.

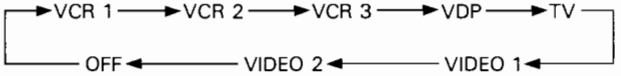

The display indicator lights to show the selected item.

㉒ REC SEL SOURCE switch

The VCR 1 REC SELECT indicator goes out when this switch is turned on. The picture and sound to be recorded by VCR 1 is selected by the input selector.

㉓ VCR NOISE FILTER switch

The noise filter only removes noise from the sound.
If tape hiss is noticeable while performing playback of video cassette tapes, press this switch to reduce the noise. The display section VCR NOISE FILTER indicator will light.

NOTE:

- *This switch can be used when either VCR 1 or VCR 2 function switches is selected.*
- *The effectiveness in reducing high-frequency hiss noise varies depending on the type of tape used, the recording level, and other conditions.*

㉔ VCR 1 REC SEL switch/indicator

Press this switch to change the source from which the VCR1 will record in the following order.

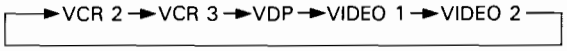

The display indicator lights to show this.
If you set the REC SEL SOURCE switch to ON then the VCR 1 REC SEL indicator will go out. Picture and sound can then be recorded from the source selected by the video input selector.

㉕ VCR 1 MODE switch

Set this switch ON, when using a VCR with monaural audio output. For both monaural input and output turn this switch on. It functions when the VCR 1 inputs are selected. The display section MONO indicator will light.

㉖ SIMULATED STEREO switch

Press to produce a simulated stereo effect when listening to monaural sources (for example AM or TV broadcasts). The indicator will light.

NOTE:
This effect is not produced through the surround rear speakers.

㉗ Audio input selector switches/indicators

TAPE 1/DAT 1:
Press to listen to the sound from the cassette deck or DAT connected to the TAPE 1/DAT 1 jacks.
TAPE 2/DAT 2 MONITOR:
Press to listen to the sound from the cassette deck or DAT connected to the TAPE 2/DAT 2 jacks.
The TAPE 2/DAT 2 MONITOR is independent of other audio input selector switches and can be switched ON/OFF independently. In the ON position, the TAPE 2 indicator in the display section lights.
LINE:
Press to listen to the sound from the component connected to the LINE INPUT jacks.
CD:
Press to listen to the playback sound from the CD player connected to the CD jacks.
TUNER:
Press to listen to AM or FM broadcasts with the tuner connected to the TUNER jacks.
PHONO:
Press to listen to the sound from the turntable connected to the PHONO jacks.

NOTE:
When playing anything other than TAPE 2/DAT 2, set the TAPE 2/DAT 2 MONITOR switch to OFF (TAPE 2 indicator is out).

㉘ Video input selector switches

VCR 1:
Press this switch when playing back a tape in the video cassette recorder connected to the VCR 1 jacks.
VCR 2:
Press this switch when playing back a tape in the video cassette recorder connected to the VCR 2 jacks.
VCR 3:
Press this switch when playing back a tape in the video cassette recorder connected to the VCR 3 jacks.
VDP:
Press to watch a program from a video disc player connected to the VDP jacks.
TV:
Press to watch TV programs (reception with a TV tuner connected to the TV jacks).
VIDEO 1:
Press this when playing from equipment (satellite receiver, etc.) connected to VIDEO 1 jack.
VIDEO 2:
Press this when playing from equipment (video camera etc.) connected to VIDEO 2 INPUT jack on the front panel.

㉙ VIDEO ADAPTOR switch

Press to obtain a video signal passed through an external video signal processor connected to the VIDEO ADAPTOR jacks.
Be sure to set to OFF when not using the VIDEO ADAPTOR jacks.
The video adaptor switch cannot be used with components connected by an S-VIDEO lights.

㉚ VIDEO 2 INPUT jacks

Video components such as a video camera can be connected here.

12. REAR PANEL FACILITIES

* Illustration shows U.S. model.

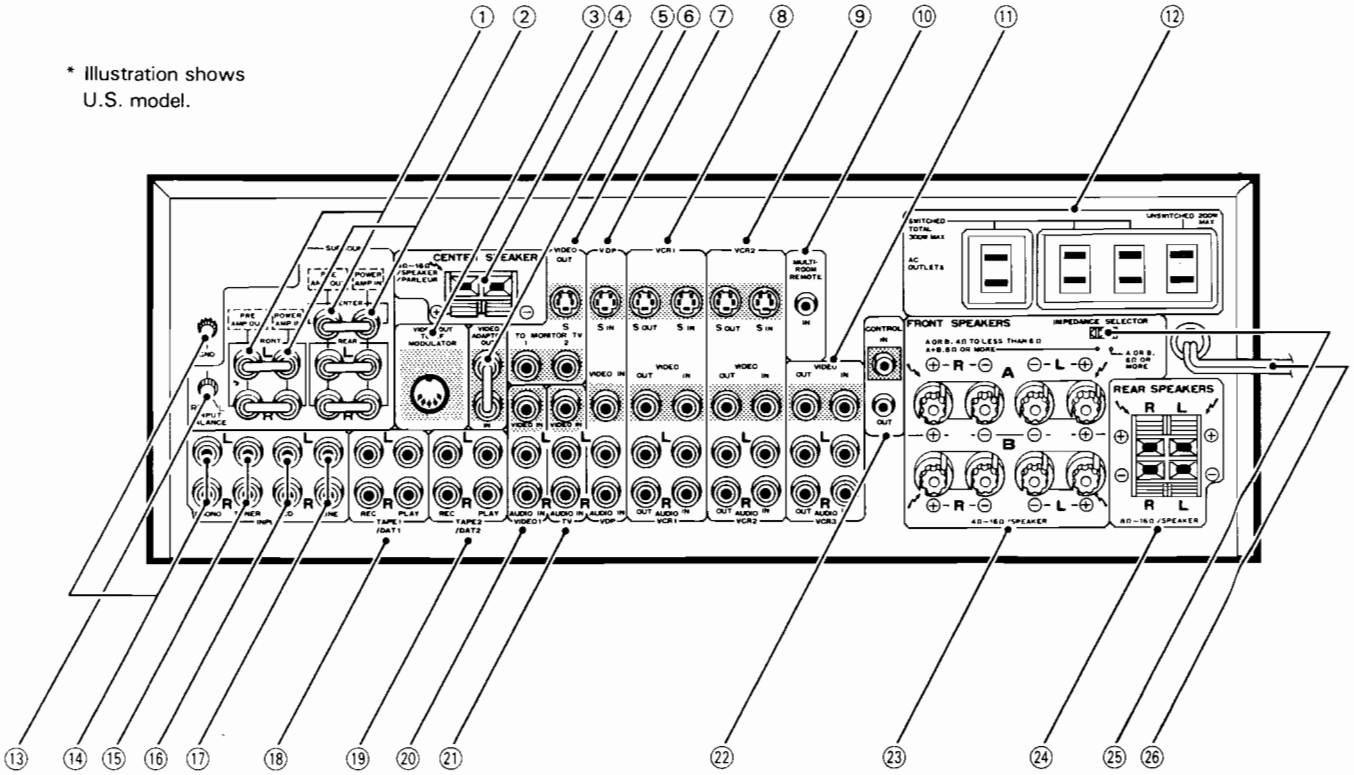

① PRE AMP OUT jacks

When using a power amplifier to boost the volume of front, rear or center speakers, connect here. Connect the power cord of the power amplifier to the AC OUTLETS (SWITCHED) of this unit.

NOTE:
Pay attention to the power consumption of the power amplifier used. For more details refer to ⑫ AC OUTLETS.

② POWER AMP IN jacks

When a preamplifier (optional) is used with the VSA-1000 power amplifier to drive the front, rear or center speakers, use these jacks. First switch the preamplifier power ON, and then switch the VSA-1000 power ON.

NOTE:
When not using, be sure to connect the PRE AMP OUT and the POWER AMP IN with a connector bar.

③ VIDEO OUT TO RF MODULATOR jack

Use this when connecting a TV set that doesn't have a video input jack. When performing connections, the RF MODULATOR JA-RF5 (sold separately) is required. By connecting an RF modulator, video signal can be converted to VHF signal (U.S. channel 3 or 4), thus allowing this unit to be used to view the selected source on a TV set.

④ CENTER SPEAKER terminals

Use to connect a surround center channel speaker system.
Connect a speaker system having a nominal impedance ranging from 8Ω to 16Ω.

⑤ VIDEO ADAPTOR IN/OUT jacks

Use to connect a video adaptor component such as a video enhancer or color corrector.

⑥ VIDEO OUT jacks

Connect to a monitor TV video input jack.
If the monitor TV has an S-VIDEO input, and a VDP or VCR is connected to the VSA-1000 with an S-VIDEO connector, the S-VIDEO connector can also be used.
There are 2 sets of video output jacks so 2 monitors can be used at the same time if you wish.

⑦ VDP jacks

Connect here to the output jacks of a Videodisc player.
It is also possible to connect to the S-VIDEO connector if the VDP has an S-VIDEO output.

⑧ VCR 1 IN/OUT jacks

IN:
Connect to VCR output (video/audio) jacks.
OUT:
Connect to the VCR input (video/audio) jacks.

- If the VCR has S-VIDEO input/output connectors the S-VIDEO connectors can also be used.
- If the audio input/output of the VCR is monaural, connect to VCR 1 either of the L or R jacks and set the VCR 1 MODE switch to the MONO position.

⑨ VCR 2 IN/OUT jacks

Connect to the second VCR input/output jacks.

- If the VCR has S-VIDEO input/output connectors, it can also be connected to the S-VIDEO connectors.

⑩ MULTI-ROOM REMOTE jack

The optional MR-100 Multi-room remote control unit can be connected.

⑪ VCR 3 IN/OUT jacks

Connect to the third VCR input/output jacks.

⑫ AC OUTLETS

SWITCHED TOTAL 300 W MAX

Power supplied through these outlets is turned on and off by the amplifier's POWER switch. Total electrical power consumption of connected equipment should not exceed 300 W.

UNSWITCHED 200 W MAX

Power flows continually to this outlet, regardless of whether the amplifier is switched ON or OFF. Electrical power consumption of the connected equipment should not exceed 200 W.

The equipment should be disconnected by removing the power plug from the wall socket when not in regular use, e.g. when on vacation.

NOTE:

Do not connect appliances with high power consumption such as heaters, irons, or television sets to the AC OUTLETS in order to avoid overheating or fire risk.

This can cause the receiver to malfunction.

⑬ INPUT BALANCE control knob

Use to adjust the DOLBY PRO LOGIC SURROUND input balance.

NOTE:

Perform this adjustment to assure correct surround sound reproduction.

⑭ PHONO INPUT jacks/GND terminal

Connect here the output of a turntable. Connect the ground cable to the GND terminal.

Use a moving magnetic (MM) cartridge for the turntable.

⑮ TUNER INPUT jacks

Connect to the output jacks of a FM/AM tuner.

⑯ CD INPUT jacks

Connect to the output jacks of a compact disc player.

⑰ LINE INPUT jacks

Connect to the output jacks of an audio component.

⑱ TAPE 1/DAT 1 jacks

Connect a DAT (digital audio tape deck) or your primary analog cassette deck to these jacks.

Connecting for Recording

The tape recording jack (TAPE REC) on the cassette deck or DAT should be connected to the REC side of the TAPE 1/DAT 1 jack on the amplifier with a pin plug connecting cord.

Connecting for Playback

Connect the TAPE PLAY jack on the cassette deck or DAT to the PLAY side of the TAPE 1/DAT 1 jack on the amplifier with a pin plug connecting cord.

NOTE:

When using DAT, connect its analog input/output terminals.

⑲ TAPE 2/DAT 2 jacks

Connect to the input/output jacks of the second cassette deck or DAT.

⑳ VIDEO 1 jacks

Connect to the video and audio outputs of a video component.

㉑ TV jacks

Use these jacks if wish to connect a TV tuner having both video and audio outputs.

[VIDEO IN]

Connect the TV tuner's video output to this jack.

[AUDIO IN (L, R)]

Connect the TV tuner's audio output to these jacks.

㉒ CONTROL IN/OUT jacks

These terminals are for input/output of control signals when operating other components with the attached remote control unit.

㉓ FRONT SPEAKERS terminals

A: Connect to a first set of speakers.

B: Connect to a second set of speakers.

Please refer to item ㉕ Front speakers IMPEDANCE SELECTOR switch.

㉔ REAR SPEAKERS terminals

Connect the surround rear speakers to these terminals.

Speaker impedance

Connect speaker systems with a nominal impedance of between 8 Ω and 16 Ω.

NOTE:

Do not allow any of the cord's conductors to protrude from the terminals or touch any other conductors. Malfunctioning or breakdowns may occur when conductors come into contact with each other.

㉕ IMPEDANCE SELECTOR switch

Set this switch to match the impedance of your front speakers.

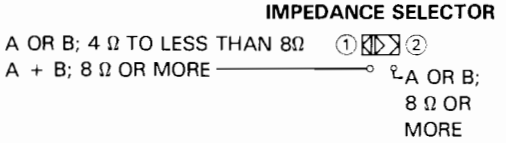

- **When using a pair of speakers:**

Impedance of a speaker	Selector position
4 Ω to less than 8 Ω	①
8 Ω or more	②

- **When using two pairs of speakers:**

Select ① as the selector switch position and use speakers having impedance of 8 Ω or more.

NOTE:

Turn off the amplifier's power before changing the impedance selector switch setting.

㉖ Power cord

Connect this to the AC wall socket.

13. SPECIFICATIONS

Amplifier Section
[POWER AMP IN]

Continuous average power output of 100 watts* per channel, min., at 8 ohms, from 20 Hz to 20,000 Hz with no more than 0.005% total harmonic distortion (front); 30 watts* per channel, min., at 8 ohms, from 20 Hz to 20,000 Hz with no more than 0.08%** total harmonic distortion (surround); 30 watts*, min., at 8 ohms, from 20 Hz to 20,000 Hz with no more than 0.08%** total harmonic distortion (center).**

Dynamic power (2 Ω/4 Ω/8 Ω) ..... 250 W/220 W/150 W

Audio section

Signal to noise ratio (IHF, A network, shorted)
- PHONO ..... 83 dB
- VCR 1, VCR 2, VCR 3, VDP, TV, VIDEO 1, VIDEO 2, TAPE 1/DAT 1, TAPE 2/DAT 2, LINE, CD, TUNER..... 98 dB

Signal-to-noise ratio [EIA, at 1 W (1 kHz)]
- PHONO ..... 77 dB
- VCR 1, VCR 2, VCR 3, VDP, TV, VIDEO 1, VIDEO 2, TAPE 1/DAT 1, TAPE 2/DAT 2, LINE, CD, TUNER..... 80 dB

Damping factor (1 kHz, 8Ω) ..... 100 or more

Input (sensitivity/impedance)
- PHONO ..... 2.5 mV/50 kΩ
- VCR 1, VCR 2, VCR 3, VDP, TV, VIDEO 1, VIDEO 2, TAPE 1/DAT 1, TAPE 2/DAT 2, LINE, CD, TUNER..... 150 mV/30 kΩ
- POWER AMP IN ..... 1 V/50 kΩ

Phono overload level (T.H.D. 0.1%, 1 kHz) ..... 150 mV

Frequency response
- PHONO (RIAA equalization) ..... 20 Hz to 20 kHz, ±0.3 dB
- VCR 1, VCR 2, VCR 3, VDP, TV, VIDEO 1, VIDEO 2, TAPE 1/DAT 1, TAPE 2/DAT 2, LINE, CD, TUNER..... 5 Hz to 100 kHz, $^{+0}_{-3}$ dB

Output (level/impedance)
- TAPE 1/DAT 1, TAPE 2/DAT 2 REC..... 150 mV/2.7 kΩ
- VCR 1, VCR 2, VCR 3 AUDIO OUT ..... 150 mV/2.7 kΩ
- PRE AMP OUT..... 1 V/220Ω

Tone control
- BASS ..... ±8 dB (100 Hz)
- TREBLE..... ±8 dB (10 kHz)

Filter
- VCR NOISE FILTER ..... 100 Hz, 5 kHz, −3 dB

Muting..... −∞

Loudness contour ..... 100 Hz/+6 dB, 10 kHz/+3 dB

Video section
[Base band terminals]

Input (sensitivity/impedance)
- VCR 1, VCR 2, VCR 3, VDP, TV, VIDEO 1, VIDEO 2, VIDEO ADAPTOR 1 Vp-p/75Ω

Output (level/impedance)
- VCR 1, VCR 2, VCR 3, VIDEO ADAPTOR, TO MONITOR TV 1, TO MONITOR TV 2..... 1 Vp-p/75Ω

Frequency response
- VCR 1, VCR 2, VCR 3, VDP, TV, VIDEO 1, VIDEO 2, VIDEO ADAPTOR (to TO MONITOR TV 1, 2) 10 Hz to 10 MHz, $^{+0}_{-3}$ dB

DG/DP ..... 2% / 2°

Signal-to-noise ratio ..... 55 dB

Cross talk ..... 55 dB (3.58 MHz)

[S terminals]

Input (sensitivity/impedance)
- VCR 1, 2, VDP ..... Luminance signal: 1 Vp-p/75Ω
  Color difference signal: 0.286 Vp-p/75Ω

Output (level/impedance)
- VCR 1, 2, TO MONITOR TV..... Luminance signal: 1 Vp-p/75Ω
  Color difference signal: 0.286 Vp-p/75Ω

Frequency response
- Luminance signal..... 10 Hz to 10 MHz, $^{+0}_{-3}$ dB

Signal-to-noise ratio
- Luminance signal..... 55 dB

Cross talk ..... 55 dB (3.58 MHz)

Surround section

Input (sensitivity/impedance)
- REAR, CENTER (POWER AMP IN) ..... 1 V/50 kΩ

Output (level/impedance)
- REAR, CENTER (PRE AMP OUT)..... 1 V/470Ω

Frequency response (at DOLBY PRO LOGIC SURROUND)
- VDP to REAR SPEAKERS..... 20 Hz to 6 kHz, $^{+0}_{-3}$ dB

Miscellaneous

Power requirements
- U.S. model ..... AC 120 V, 60 Hz
- Other destination models ..... AC 110/120 - 127/220/240 V (switchable), 50/60 Hz

AC outlets
- U.S. model..... SWITCHED x 3: TOTAL 300 W MAX
  UNSWITCHED x 1: 200 W MAX
- Other destination models ... SWITCHED x 2: TOTAL 300 W MAX
  UNSWITCHED x 1: 200 W MAX

Power consumption
- U.S. model ..... 300 W (UL)
- Other destination models ..... 800 W
- In standby condition ..... 3 W

Dimensions ..... 420 (W) x 162 (H) x 421 (D) mm
16-17/32 (W) x 6-3/8 (H) x 16-9/16 (D) in

Weight (without package) ..... 12.5 kg (27 lb 9 oz)

Furnished parts

- Dry cell batteries 4
- Remote control unit 1
- Template 2
- Operating instructions 1
- Connection cords (U.S. model only)
  - Audio/video cord 1
  - Video cord 1
  - Audio cord (stereo-mono) 1

NOTE:
Specifications and design are subject to change without notice due to improvements.

* *Measured pursuant to the Federal Trade Commission's Trade Regulation rule on Power Output Claims for Amplifier.*

** *Measured by Audio Spectrum Analyzer.*

CLEANING

Ordinarily, use a soft cloth to wipe the exterior.
If very dirty, dissolve a neutral dish cleaning fluid in water, moisten a soft cloth with the solution, wring out the cloth to remove excess liquid, and wipe away dirt. Never use alcohol, paint thinner, benzene, insecticides, or other solvents or sprays on this unit. The surface legends and finish may be damaged. Read instructions carefully before using treated dust cloths.